Operating Instructions

for the

hallicrafters

HT 8 Radiophone

Manufactured By

the hallicrafters inc.

2611 Indiana Avenue Chicago, U. S. A.

MODEL KT-8 MARINE RADIO-PHONE

INSTRUCTIONS FOR INSTALLATION AND OPERATION

1. UNCRATING

Unpack the transmitter and accessories and carefully inspect for any damage which might have occurred during shipment. If any damage is found, file a claim immediately with the local office of the transportation company. It is recommended that the original packing material be preserved.

2. INSTALLATION

Included in the complete radio-phone equipment are the main cabinet housing the transmitter and receiver, a separate cabinet housing the power supply, a ten foot inter-connecting cable and a twelve contact power plug. The main radio-phone unit should be mounted in a position as close to the antenna leadin and ground connections as possible. It is important that the ground lead be kept short.

WALL MOUNTING

The back cover to which the unit is attached by six snap fasteners serves also as the mounting plate for the transmitter. After the back cover has been bolted into position the lower half of the radio cabinet may be set into place with the top cover removed for tuning. After tuning adjustments have been made the top cover may be put on and the transmitter tuning trimmed if necessary through the holes which are covered by the tuning chart. In mounting the transmitter to a wall the back cover may be bolted directly to the wall by means of four one-quarter inch bolts.

TABLE MOUNTING

The bulk head model may be mounted on a table if so desired. If it is necessary to anchor it small angle brackets may be bolted to the sides along the bottom.

SHOCK ABSORBING MOUNTING

A shock mounting frame is available as an accessory to the bulk head model and is recommended in all cases where severe vibration is expected. The shock mounting frame is mounted to a wall by means of bolts through the rear of the vertical angles or may be mounted to a table. The back cover of the radio-phone unit is now mounted into the frame and installation proceeds as before.

POWER SUPPLY

The small power supply unit can be mounted in any convenient place on the floor, in a locker or in an engine room up to ten feet away from the main unit. A ten foot inter-connecting cable plugs into the power supply at one end and into the lower chassis of the main unit at the other end, passing through a grommet in the side of the cabinet. If the power supply is located close to the main unit the connecting cable may be shortened up to make a ship-shape job. If the power supply unit must be bolted down, its cover may be removed and bolts passed through four of the holes in the end. Ordinarily no shock-proofing is needed for the power supply but if it is felt that the vibration is too severe, it may be mounted on a pad of sponge rubber.

BATTERY CABLE CONNECTIONS

Three different power supplies are available for the HT-8, marked 12 volt, 32 volt, or 110 volt respectively. Any one of these may be used with an HT-8 without making any alterations in the transmitter-receiver or the interconnecting cable, but the battery plug connections must be correct for the voltage used. None of these power supplies can be used on a D.C. voltage different from that for which it is designed.

Any one of these power supplies can be used on 110-120 volts, 50/60 cycles A.C. by making a change in the connection to the battery plug.

Connections to the 12 prong battery plug are as follows:

12 Volt Power Pack

(a) 12 V. D.C. operation - Connect hot side of battery to terminal 2 and grounded side of battery to terminal 12 (Polarity makes no difference). Connect jumpers from 2 to 1, 6 to 4, and 10 to 11.

(b) 110 V. A.C. operation - Connect line to 5 and 6 with jumpers from 3 to 1 and 9 to 11.

32 Volt Power Pack

(a) 32 V. D.C. operation - Battery connects to 2 and 12 (need not be grounded) with a jumper from 7 to 10.

(b) 110 V. A.C. operation - Line connects to terminals 5 and 6 with jumper from 3 to 1.

110 Volt Power Pack

(a) 110 V. D.C. operation - Battery connects to 2 and 12 (need not be grounded) with a jumper from 7 to 10.

(b) 110 V. A.C. operation - Line connects to terminals 5 and 6 with jumper from 3 to 1.

NOTE

Where it is contemplated that change from A.C. to D.C. will be made frequently, it is recommended that a spare battery plug wired for A.C. be carried.

ANTENNA AND GROUND

In the back of this instruction book will be found a sheet giving several recommendations for antennas. This transmitter is designed to tune any single wire antenna between the lengths of 28 to 85 feet in the frequency range between 2000 and 6000 KC. Shorter antennas may also be tuned, but the result is likely to be decreased efficiency. As stated before it is important that the ground lead be kept short and of heavy wire.

3. TUNING PROCEDURE

A - Transmitter Tuning

The transmitter has been tested at the factory for the frequencies marked on the tuning chart on the front cover. The crystals are plugged into the corresponding numbered sockets. No crystal oscillator tuning is necessary as the oscillator is of the Pierce type.

NOTE

If with the antenna circuit tuned for rated plate current the grid current is below the rated value of 2 1/2 to 5 ma, the excitation may be raised by a jumper on the 8 prong octal plug next to the 6L6 oscillator. The jumper is connected from the prong numbered to correspond to the frequency in question to either No. 6 or No. 7 depending on the increase needed. Good crystals in the range of 2000 to 3000 KC will not need this but some higher frequency crystals may.

Antenna tuning should be carefully done for good results. The tuning system used in the HT-8 is worked out to handle reactive single wire antennas as found on boats and will tune a single wire antenna of from 28 to 85 feet in length for any frequency between 2000 and 6000 KC. Since the equipment is necessarily compact the tuning requires slightly more patience than if space were not a factor. Once the antenna tuning is properly set, choice of any one of five frequencies is had by setting the transmitter frequency switch to the desired point.

Let us assume that we are tuning frequency No. 1, which we will assume is about 2200 KC. The top cover is removed and upon examining the terminal strip on which is mounted the coil there will be seen three rows of numbered terminals, one marked "P", one marked "A" and one marked "L". The "P" terminal is from the plate of the tube, the "A" terminal is the coupling tap and the "L" terminal is for the loading coil if needed. Begin with the loading coil shorted completely, which is done by connecting terminal "L1" to the left lead of the loading coil passing through the chassis. Set the clip from P1 at the following position, depending on the frequency.

Frequency	Turns from Right Hand end of Coil
2100-2200	26
2700	20
4400	15
5500	10
6600	7 or 8

These taps will be found to be about as described above when received from the factory. Disconnect clip "A1" from the coil. Place the meter switch in the PA plate position. Loosen the lock nut on tuning adjustment No. 1 and press the microphone button - then quickly rotate the tuning condenser with a screw driver until a dip in plate current is noted. Set the condenser for minimum plate current which will be about 40 ma, as the meter reads both screen and plate current. Note the position of the condenser setting by the position of the screw driver slot and in all subsequent adjustments and setting of coil taps the setting of this condenser for minimum plate current should be kept within about 15 degrees of this point. Clip No. "A1" can be clipped to the coil a few turns from the right hand end. Press the microphone button and again readjust for resonance. The clip "A1" should be gradually moved to the left until the plate current at resonance is about 100 ma. It should be noted carefully that the resonance point is obtained and not a false indication by the condenser tuning all the way in or all the way out. The variable condenser has a fixed padding condenser across it so its range of tuning is limited. When moving up the "A1" tap if it is found that the setting of the condenser for resonance is changing, the "P1" tap should be moved to compensate for this. In all cases where frequencies below 3000 KC are being used with an antenna of not over 85 feet, it will be found that when moving the "A1" tap to the left it will be necessary to gradually move the "P1" tap to the right in order to maintain the condenser tuning at about the same place. With shorter antennas the "A1" will have to be

moved far to the left and even then it may be found impossible to obtain a resonant plate current of 100 ma, in which case some of the loading coil should be cut into the circuit. A lead connected from terminal "L1" to one of the loading coil taps beginning at the top will do this after removing the lead which has been shorting the loading coil. Best results will be obtained with the loading coil set at a tap such that rated plate current is obtained with an "A1" tap near the right hand end of the coil.

This procedure should be repeated for each of the other frequencies and it is recommended that after the proper taps have been found the flexible leads be replaced by soldered bus bar leads for permanency. The cover may now be put on and with the tuning chart removed the adjustments should again be trimmed through the holes in the front panel, since replacing the cover will tend to alter slightly the inductance of the coils. The tuning adjustments may now be locked.

B - Receiver Tuning

The receiver is provided with 6 crystal controlled channels, five of which correspond to the 5 transmitter channels and the sixth of which may be used to receive the Marine weather broadcasts (2662 or 2572 kc.) or for an extra receiving channel.

Channels 1 & 2 are included in a plug in assembly. Where one or two frequencies above 3000 kc. have been specified, a special plug in assembly is provided with coils to tune these frequencies. Channels 3, 4, 5, and 6 are built in permanently, and cover the range 2110 to 2800 kc. without alteration. The tuning adjustments for the antenna and r.f. stages are numbered to correspond to the band switch.

Crystal positions are also numbered to correspond to the band switch. Since the I.F. frequency is 455 kc., the crystal frequency differs from the receiving frequency by 455 kc. The attached table shows commonly used marine frequencies and corresponding crystal frequencies. If, for example, channel #3 is to be used for receiving on 2738 kc., it is seen from the table that the crystal frequency should be 2283 kc. The crystal marked 2283 kc. should then be plugged into the #3 crystal socket.

Where receiver frequencies have been specified, the r.f. and antenna adjustments have been made at the factory, and it is only necessary to plug in the proper crystals to place the receiver in operation. If it is desired to set up new frequencies, the procedure is as follows:

(1) Plug in the correct crystal for the channel being tuned.

(2) Couple a modulated signal generator to the antenna posts and set it to the approximate receiving frequency.

(3) Turn on the receiver. A tone should be heard in the output. Set the signal generator for maximum receiver output.

(4) Adjust r.f. and antenna adjustment screws (bearing same number as crystal socket and switch setting) until maximum receiver output is obtained.

(5) Lock adjustment by tightening lock nuts.

C - Other Adjustments

I.F. Alignment

1. Impress modulated 455 KC signal on first I.F. grid.
2. Align both transformers roughly.
3. Detune tertiary (middle screw) of interstage transformer by turning screw as far as it will go.
4. Align primary and secondary accurately.
5. Align interstage tertiary (middle screw). Do not realign primary and secondary after aligning tertiary.
6. Detune diode tertiary (middle screw).
7. Align primary and secondary of diode.
8. Align diode tertiary. Do not realign primary and secondary after aligning tertiary.

The use of an oscilloscope for aligning an amplifier using triple tuned transformers while advantageous, is not necessary if the procedure given above is carefully followed.

Q - AVC Control: Q-AVC control is located at the rear of the top chassis in the form of a screw driver slot adjustment. This control adjusts the threshold of sensitivity of the receiver, carrier or noise below the threshold point being suppressed completely. This may be set so that the normal static and background noise is inaudible in the loud speaker, after which any signal above this level will come through with normal volume. When receiving a weak signal under bad atmospheric conditions it may be necessary to turn up this control to advance the sensitivity.

NOTE

If the 6SQ7 and 6SF5 tubes are replaced it may be necessary to readjust the control point of the Q-AVC. This adjustment is found underneath the receiver chassis on the rear coil shield and is set so that the desired range of control can obtain on the chassis mounted Q-AVC control.

TRANSMITTER AUDIO VOLUME CONTROL: The Transmitter audio volume control is located on the lower chassis and is set at the factory for normal voice level.

4. OPERATING

The receiver is turned on by the switch marked "receiver". The switch marked "transmitter" controls the transmitter filaments and allows these to be left unused during normal long standby periods to reduce battery drain. This switch should be turned on and the transmitter filaments allowed to warm up for about 15 seconds before a transmission period. With the transmitter and receiver frequency switches set to the desired points communication is effected by lifting the handset from the hook, after which the receiver will be heard in the handset and transmitting can be done by pressing the thumb switch and speaking into the microphone. If the meter switch is left in the "Modulator Plate" position the needle of the meter will just flicker under full modulation.

The switch to the left of the speaker turns it off and on. If a selective ringer is used, the speaker may be turned off during standby periods. Privacy during transmission may also be obtained by turning off the speaker.

5. RINGER ATTACHMENT

All HT-8 transmitters having serial numbers higher than 650 are equipped with a plug for connecting to an external ringer. Connections are shown in an accompanying diagram.

HT-8 PARTS LIST

RESISTORS

R1 -	100,000	Ohms	1/3 Watt
R2 -	300	"	1/3 "
R3 -	5,000	"	1/2 "
R4 -	50,000	"	1/3 "
R5 -	250,000	"	1/2 "
R6 -	25,000	"	1 "
R7 -	500,000	"	1/3 "
R8 -	300	"	1/3 "
R9 -	20,000	"	1/3 "
R10 -	300	"	1/3 "
R11 -	20,000	"	1/3 "
R12 -	250,000	"	1/3 "
R13 -	500,000	"	Variable
R14 -	500,000	"	1/3 Watt
R15 -	1 Meg	"	1/3 "
R16 -	1 Meg	"	1/3 "
R17 -	150,000	"	1/3 "
R18 -	2,000	"	1/3 "
R19 -	5,000	"	Variable
R20 -	150	"	1/3 Watt
R21 -	20,000	"	1 "
R22 -	10,000	"	1 "
R23 -	250,000	"	1/3 "
R24 -	500,000	"	Variable
R25 -	500	"	1 Watt

RESISTORS

R26 -	35	Ohms	1 Watt
R27 -	5,000	"	1/3 "
R28 -	100	"	1/3 "
R29 -	50,000	"	1 "
R30 -	250	"	1/2 "
R31 -	50,000	"	1 "
R32 -	5,000	"	1 "
R33 -	5,000	"	1 "
R34 -	5,000	"	1 "
R35 -	10,000	"	1 "
R36 -	250	"	10 "
R37 -	20,000	"	10 "
R38 -	40	"	2 "
R39 -	330	"	10 "
R40 -	6,000	"	10 "
R41 -	5,000	"	2 "
R43 -	500	"	Variable
R44 -	500	"	2 Watt
R45 -	40	"	2 "
R46 -	200	ma shunt	
R47 -	"	"	"
R48 -	100	Ohms	1/3 Watt
R49 -	8,000	"	1/3 "
R50 -	75,000	"	2 "
R51 -	15	"	10 "

CONDENSERS

C1 -	.01 mf.	- 400 V
C2 -	.02 "	- 400 V
C3 -	.1 "	- 400 V
C4 -	.0001 "	- 600 V Mica
C5 -	.02 "	- 400 V
C6 -	.02 "	- 400 V
C7 -	.0005 "	- 600 V Mica
C8 -	.02 "	- 400 V
C9 -	50 mmf.	- 600 V Mica
C10 -	.02 mf.	- 400 V
C11 -	.05 mf.	- 400 V
C12 -	100 mmf.	
C13 -	100 mmf.	
C14 -	.01 mf.	- 400 V
C15 -	.01 mf.	- 400 V
C16 -	.02 mf.	- 400 V
C17 -	10 mf.	- 25 V
C18 -	.01 mf.	- 600 V
C19 -	.1 mf.	- 400 V
C20 -	.1 mf.	- 400 V
C21 -	100 mmf.	- 600 V

CONDENSERS

C22 -	.006	- 900 V
C23 -	.002	- 600 V
C24 -	.002	- 600 V
C25 -	.00005	- 900 V
C26 -	.006	- 900 V
C27 -	.002	- 600 V
C28 -	.002	- 2500 V
C29 -	20 mf.	- 100 V
C30 -	20 mf.	- 100 V
C31 -	20 mf.	- 100 V
C32 -	4-4 mf.	- 475 V
C33 -	.5 mf.	
C34 -	8 mf.	
C35 -	16 mf.	
C36 -	2 mf.	
C37 -	.5	
C38 -	.5	
C39 -	.5	
C40 -	.001	
C41 -	.002 mf.	- 600 V Mica
C42 -	.002 mf.	- 2500 V "

MARINE FREQUENCIES FOR SHIP INSTALLATION

Ocean (Transmitter frequency tolerance - .04%)

	Transmitter Freq.	Receiver Freq.	Receiver Crystal
Ship to Ship	2738	2738	2283
Coast Guard	2670	2670	2215
Boston (WOU)	2110	2506	2051
New York (WOX, Staten Island)	2198	2590	2135
New York (WAQ, Ocean Gate)	2126	2522	2067
Norfolk (WGS)	2142	2538	2083
Charleston, S. Car. **	2174	2566	2111
Miami (WDR)	2118	2514	2059
Tampa *	2206	2598	2143
New Orleans (WAK)	2166	2558	2103
Houston *	2134	2530	2075
Los Angeles (KOU, San Pedro)	2174	2566	2111
San Francisco (KLH)	2110	2506	2051
Seattle (KOW)	2126	2522	2067
Wilmington, Del. **	2126	2522	2067
Marine Weather Broadcast		2662	2207

Inland waters (Transmitter frequency tolerance .02%)

Ship to Ship	2738	2738	2283
General Calling & Safety	2182	2182	2637
Ship to Shore (general)	2118	2514	2059
Lorain, Ohio (WMI)	2158	2550	2095
" " (WMI)	6660	6470	6015
Lake Bluff, Illinois (WAY)	2118	2514	2059
Port Washington, Wisconsin (WAD)	2118	2514	2059
Duluth, Minn. (WAS)	2158	2550	2095
Memphis, Tenn. (WJG)	2738	2738	2283
Marine Weather Broadcast		2572	2117

** Proposed
* Under construction

Prepared by - HALLICRAFTERS, INC.
CHICAGO, ILLINOIS.

the hallicrafters *inc.*

DETAILED SCHEMATIC DIAGRAM — MARINE RADIOPHONE — MODEL HT-8

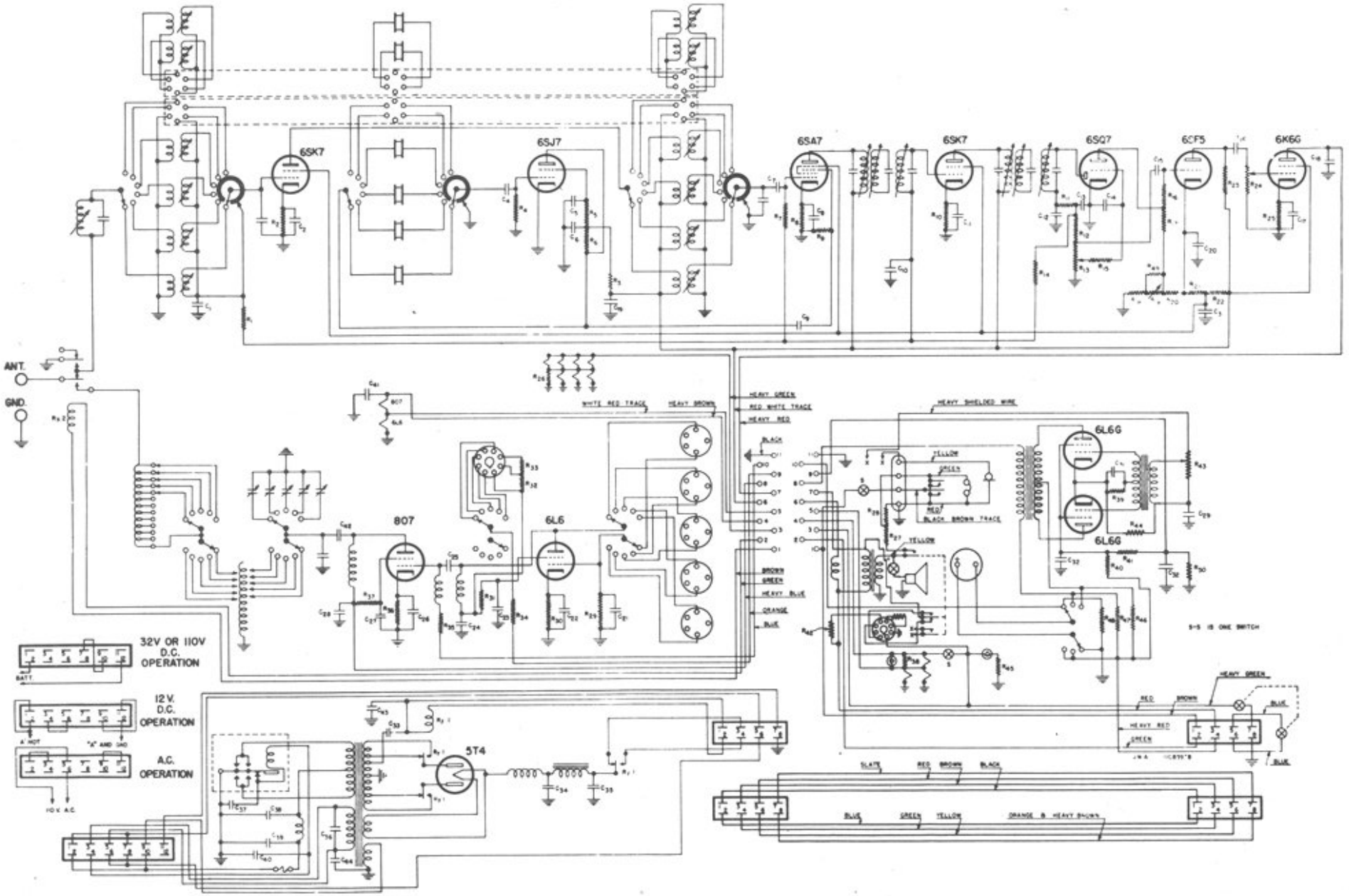

CONNECTIONS FOR ADAPTING W.E. 104A SELECTIVE RINGER TO HT-8

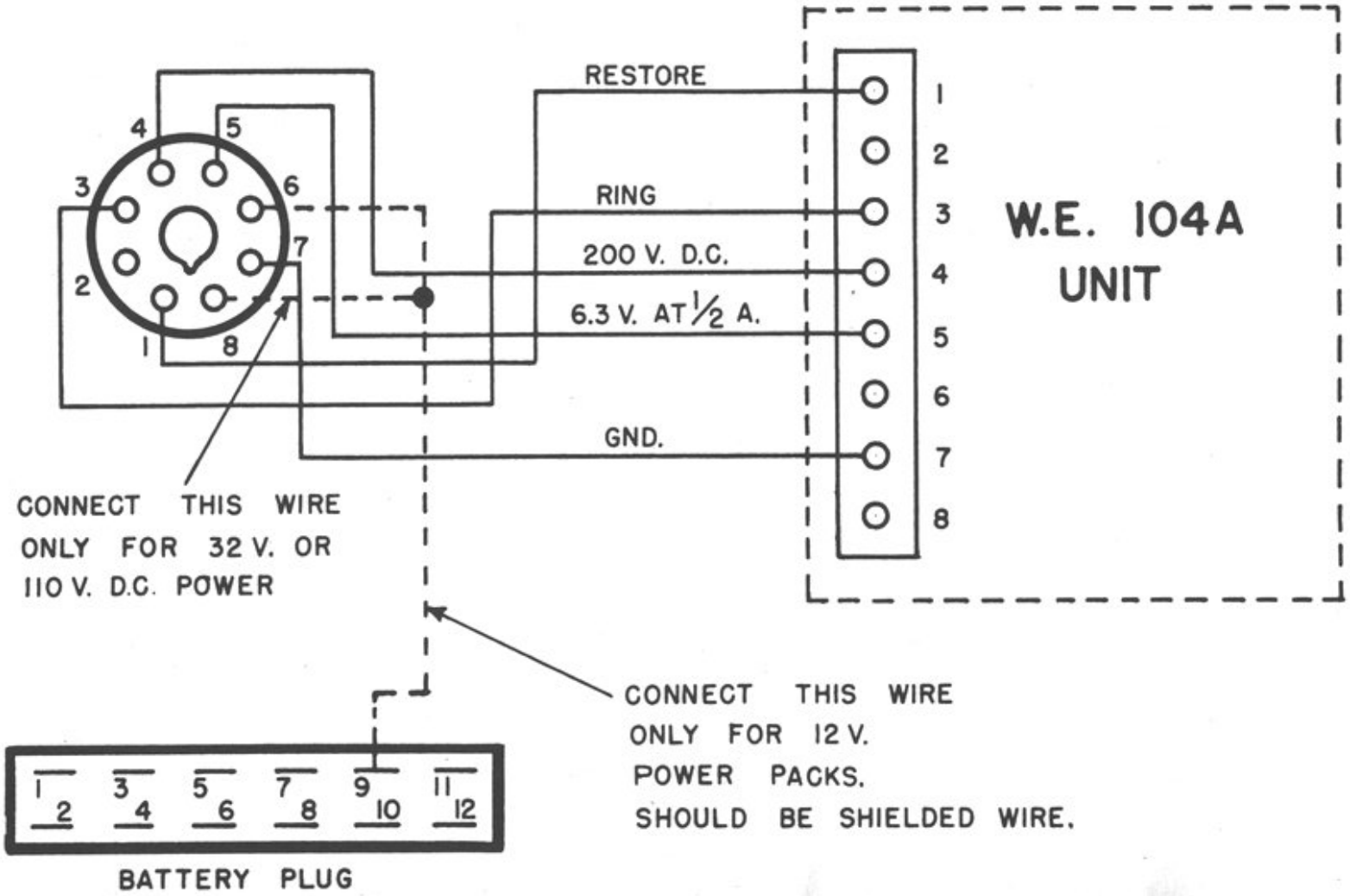

G U A R A N T E E

This transmitter is guaranteed to be free from any defect in workmanship and material that may develop with in a period of ninety (90) days from date of purchases, under the terms of standard guarantee, as designated by the Radio Manufacturers Association. Any part or parts that prove defective within this period will be replaced without charge when subjected to examination at our factory, providing such defect, in our opinion, is due to faulty material or workmanship, and not caused by tampering, abuse or normal wear. All such adjustments to be made F.O.B. the factory. Should it be necessary to return any part or parts to the factory, a "Return Material Permit" must be obtained in advance by first writing the Adjustment Department, who will issue due authorization under the terms of the guarantee. The Hallicrafters, Inc., reserve the right to make changes in design or add improvements to instruments manufactured by them without incurring any obligation to install the same in any instrument purchased.

ALL HALLICRAFTERS transmitters are built under Patents of the Radio Corporation of America and the American Telephone and Telegraph Co.