ICF-7600DA/7700

SERVICE MANUAL

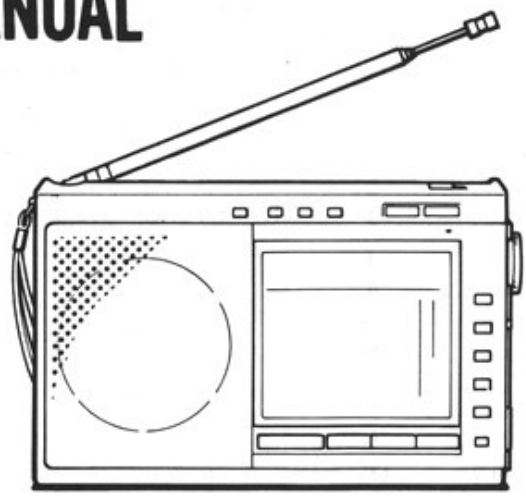

AEP Model
UK Model
E Model
AUS Model
ICF-7600DA:
US Model
Canadian Model
ICF-7700:

SPECIFICATIONS

Circuit system	FM: Superheterodyne LW/MW/SW: Dual conversion superheterodyne
Frequency range	FM: US, Canadian model: 76.0—108.0 MHz AEP, UK, E, AUS model: 87.5—108.0 MHz MW: 530-1,700 kHz LW: 150-285 kHz SW (1-12 SW broadcast bands): 3,050-26,100 kHz
Antennas	FM/SW: Telescopic antenna MW/LW: Built-in ferrite bar antenna
Speaker	Approx. 7.7 cm (3 1/8 inches) dia.
Power output	400 mW (at 10% harmonic distortion)
Outputs	Recording output jack (minijack) output level 0.775 mV (−60 dB) output impedance 1 kilohm Earphone jack (minijack) for 8 ohm earphone
Power requirements	6 V DC Four size AA (R6) batteries DC IN 6 V jack accepts: Sony AC-D4S AC power adaptor (optional) for use on 120 V AC, 60 Hz Sony DCC-127A or DCC-240 car battery cord (optional) for use with 12 V or 24 V car battery, respectively Sony EBP-6 battery case (optional) for use with four size C (R14) batteries.
Battery life	Approx. 19 hours of listening for four hours a day at a normal volume, using Sony batteries SUM-3 (NS)
Dimensions	Approx. 191.5 × 117 × 31.5 mm (w/h/d) (7 5/8 × 4 5/8 × 1 1/4 inches) including projecting parts and controls
Weight	607 g (1 lb 5 3/8 oz) including batteries
Supplied accessories	Earphone (1) Short wave guide (1) Carrying case (1) SW compact antenna (1)

FM/LW/MW/SW
PLL SYNTHESIZED RECEIVER

SONY®

MICROFILM

TR

www.shortwaveradio.ch

TABLE OF CONTENTS

Title	Description	Page
	Specifications	1
	Features	2
	Flexible Circuit Board Repairing	2
	Main Board Removal	2
	Replacing Chip Components	3
Section 1.	Outline	4
1-1.	Location and Function of Controls	4
1-2.	Outline of the C-MOS Digital-Tuning System IC201, μPD1715G	5
1-2-1.	Outline of the Station-Selection	5
1-2-2.	Description on the Terminals	5
1-2-3.	On the Key Matrix	9
1-2-4.	Description on Displaying Function	13
1-2-5.	Initial-State Setting	14
1-2-6.	Muting-Output Timings	14
1-3.	Outline of Terminals of the LCD Dot-Matrix Segment Driver IC202, MSM5259GS	16
1-4.	On the new LCD panel, LCD1	18
Section 2.	Electrical Adjustments	19
Section 3.	Diagrams	25
3-1.	Semiconductors Lead Layouts	25
3-2.	Mounting Diagram (1)	26
3-3.	Schematic Diagram (1)	31
3-4.	Mounting Diagram (1)	35
3-5.	Schematic Diagram (2)	39
3-6.	Mounting Diagram (2)	44
Section 4.	Exploded Views and Parts List	49
Section 5.	Electrical Parts List	51
	Troubleshooting Guide	56

NOTE: Removal and Block Diagram Sections have been omitted.

FEATURES

- An FM/LW/MW/SW 1-12, 15 bands portable radio with world-wide band coverage.
- A quartz-controlled PLL (Phase Locked Loop) synthesizer system using a microcomputer for easy pinpoint tuning.
  The tuned frequency is also digitally displayed.
- Up to 15 stations can be preset for button-touch tuning.
- An easy searching a SW station with the SW meter band select function.
- A timer standby function to receive a desired broadcast at the desired time.
- A sleep timer turns the radio off automatically in 65 minutes.

Flexible Circuit Board Repairing

1. Keep the temperature of the soldering iron at 270° ± 10°C during repairing.
   You can maintain the temperature of the soldering iron around 270°C by using the thermal controller as illustrated on the right.
2. Do not touch the soldering iron more than 4 seconds or 3 times on the same conductor of the circuit board.
3. Do not apply force on the conductor when soldering or unsoldering.

Tip of soldering iron

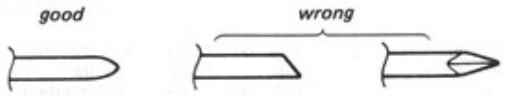

MAIN BOARD REMOVAL

Unsolder the ground-connecting pin at the main board as shown below.

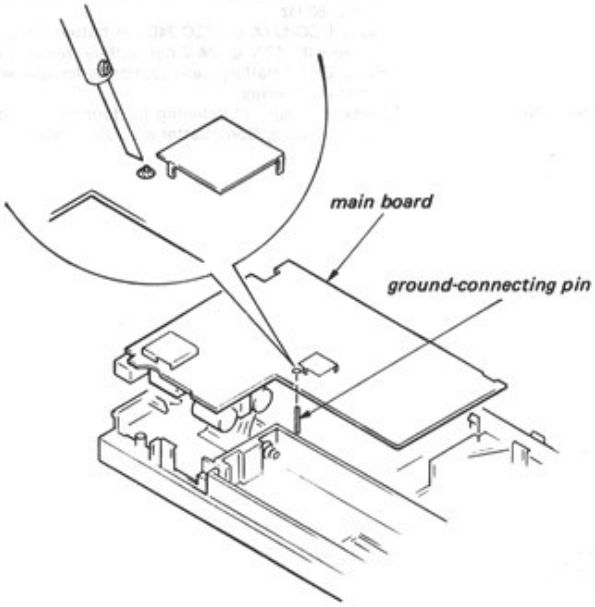

www.shortwaveradio.ch

Replacing chip components

All chip components should be connected and disconnected, using a tapered soldering iron [temperature of the iron tip: less than 280°C (536°F)], a pair of tweezers and braided wire.

Precautions for replacement

1. **Do not disconnect the chip component forcefully. Otherwise, the pattern may peel off.**
2. **Never re-use a disconnected chip component. Dispose of all old chip components.**
3. **To protect the chip component, heating time for attaching the component should be within 3 seconds.**

○ **Removing chip components**

(1) Removing solder at electrode

Remove the solder at the electrode, using a thin braided wire. Do not remove the solder of the part (chip component) attached adjacent to the electrode.

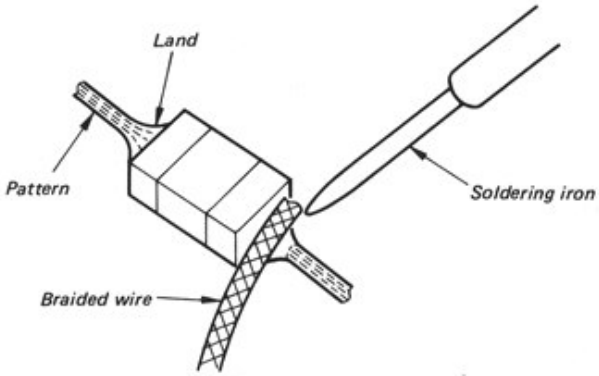

(2) Disconnecting chip components

Turn the tweezers with the soldering iron alternately applied to both electrodes, and the chip component will be disconnected. Take careful precautions while disconnecting, because if the chip component is forcefully removed the land may peel off.
Never re-use a disconnected chip component.

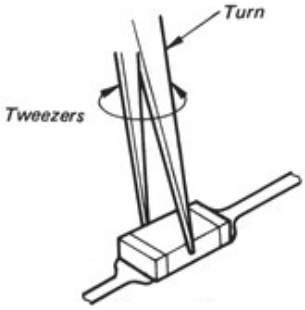

(3) Smoothing the soldered surface

After disconnecting the chip component, remove the solder by using a braided wire to smooth the land surface.

○ **Connecting chip components**

The value of chip components is not displayed on the main body. Take due precautions to avoid mixing new chip components with other ones.

(1) Applying solder to land on one side

Apply a thin layer of solder to the land on one side where the chip component is to be connected. Too much solder may cause bridging.

(2) Speedy soldering

Hold the chip component at the desired position, using tweezers, and apply the soldering iron in the arrow-marked direction. To protect the chip component, heating time should be within 3 seconds.

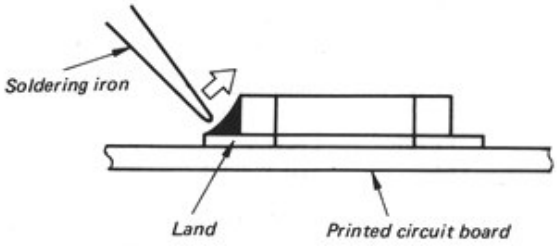

(3) Speedy soldering of electrode on the other side

Solder the electrode on the other side in the same way as in (2) above.

www.shortwaveradio.ch

SECTION 1
OUTLINE

1-1. LOCATION AND FUNCTION OF CONTROLS

Front panel

STANDBY (timer standby) button

ALARM TIME SET button

CLOCK TIME SET button

KEY PROTECT button

Speaker

Hand strap

⇦ mb SELECT ⇨ (meter band select) button

Band select buttons
(SW, MW/LW, FM)

SLEEP timer button

MAIN POWER switch
ON: To turn on the radio or to set the timer.
OFF: When carrying the radio. The radio is kept turned off even if the ON/OFF button is accidentally pressed.

ON/OFF button

TUNING indicator
Lights up when the signal is received.

TUNING/TIME ADJ (tuning/time adjustment) control

TONE control
Adjust the tone quality to your preference.
Normally set the control to MUSIC. When the noise is severe during SW reception, set it to NEWS. The noise may be reduced to some extent and the vocal part will be heard more clearly.

PRESET buttons

VOLUME control

to decrease the volume — to increase the volume

MIN — MAX

ENTER button

Rear panel

Radio stand
Lift up the stand for table use.
If the stand comes off, put it back into.

Telescopic antenna

ALARM selector
(RADIO/BUZZER)

Recording output jack

Earphone jack
When the earphone is plugged in, the sound from the speaker does not come out.

DC IN 6 V (external power input) jack

MW CH STEP selector

Battery compartment

Display window

The indications appear as follows.

KEY PROTECT indicator

Time/frequency indicator

MAIN POWER indicator

PRESET number indicator

Band indicator

FM, MW/LW band scales

SW meter band scales

CLOCK/ALARM/STANDBY/SLEEP indicators

BUZZER ALARM indicator

www.shortwaveradio.ch

1-2. OUTLINE OF THE C-MOS DIGITAL-TUNING SYSTEM IC201, μPD1715G-529.

1-2-1. OUTLINE OF THE STATION-SELECTION

1) Receiving-frequency Coverages:

The following table shows the frequency coverages the μPD1715G-529 can receive.

BAND	METER BAND	FREQUENCY COVERAGE	CHANNEL SEPARATION	NUMBER OF CHANNEL	NOMINAL SPACING	INTERMEDIATE FREQUENCY
LW		150kHz ~ 285kHz	3kHz	46ch	3kHz	10.71MHz
MW1		531kHz ~ 1,602kHz	3kHz	359ch	3kHz	10.71MHz
MW2		530kHz ~ 1,700kHz	5kHz	235ch	5kHz	10.71MHz
SW	90m	3,050kHz ~ 3,565kHz	5kHz	104ch	5kHz	10.71MHz
	75m	3,700kHz ~ 4,215kHz	5kHz	104ch	5kHz	10.71MHz
	60m	4,650kHz ~ 5,165kHz	5kHz	104ch	5kHz	10.71MHz
	49m	5,800kHz ~ 6,315kHz	5kHz	104ch	5kHz	10.71MHz
	41m	6,950kHz ~ 7,465kHz	5kHz	104ch	5kHz	10.71MHz
	31m	9,375kHz ~ 10,010kHz	5kHz	128ch	5kHz	10.71MHz
	25m	11,525kHz ~ 12,160kHz	5kHz	128ch	5kHz	10.71MHz
	21m	13,375kHz ~ 14,010kHz	5kHz	128ch	5kHz	10.71MHz
	19m	14,975kHz ~ 15,610kHz	5kHz	128ch	5kHz	10.71MHz
	16m	17,475kHz ~ 18,110kHz	5kHz	128ch	5kHz	10.71MHz
	13m	21,325kHz ~ 21,960kHz	5kHz	128ch	5kHz	10.71MHz
	11m	25,475kHz ~ 26,100kHz	5kHz	126ch	5kHz	10.71MHz
FM1		87.50MHz ~ 108.00MHz	50kHz	411ch	50kHz	10.7MHz
FM2		76.00MHz ~ 108.00MHz	50kHz	641ch	50kHz	10.7MHz

NOTE: LW and MW1 (or MW2) bands are taken into a single band in the μPD1715G-529.

2) Station-selecting Functions:

a) Manual up/down selection by using the rotary encoder tuning dial.

b) Random selection out of the preset memories by key-in calling.

LW and MW bands:	5 stations
SW band:	5 stations
FM band:	5 stations
total	15 stations

c) Last-channel memory writing and calling:
One channel is provided for each receiving band, total of 15 (fifteen).

1-2-2. DESCRIPTION ON THE TERMINALS

1) Terminal Arrangement

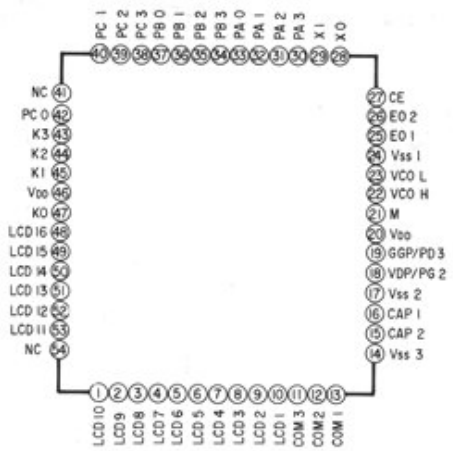

www.shortwaveradio.ch

2)

PIN Nr.	SYMBOL	NAMING	DESCRIPTION
1 THRU 10	LCD9 THRU LCD1	LCD SEGMENT SIGNALS	Transmit the segment-output signals to the LCD panel. When matrixes are configured together with the COM1 thru COM3, a display of 48 dots can be made. These output signals are output when the LCDD commands are made. The LCD-driving voltages are of 3.1V typical, 1/2 bias and 1/3 duty when the frame frequency is 100 Hz. These LCD11 through LCD16 can also be used at the same time as the key source signals for the key matrix. These signal are output on time-division bases, and they are output as the key-source signals at the repetition rate of 6.7 msec. Whether the key-source signal are to be output while having displays on the panel is dependent upon and selectable by the programs used. These terminals become automatically in the "L" (low) state, i.e., non-display mode, at the power-on reset (VDD changes from low to high state) and at the stoppage moment of the clock. The display mode does not change at the reset moment in which CE changes from low to high state.
11 THRU 13	COM3 THRU COM1	LCD COMMON SIGNAL	Transmit common signals to the LCD panel. When the matrixes are configured together with the LCD1 through LCD16, a display of 48 dots can be made. Three distinctive signals of VSS3, VSS2 and VDD are output through these terminals at the repetition rate of 50 Hz. These terminals become automatically in the "L"(low) state, i.e., non-display mode, at the power-on reset (VDD changes from low to high state) and at the stoppage moment of the clock.
14 15 16 17	VSS3 CAP2 CAP1 VSS2	CAPACITOR CONNECTION TERMINAL FOR DOUBLER	Capacitor-connection terminals to make a proper voltage doubler to build the 3.1V typical LCD-driving voltage VDD. Normal circuit configuration is as follows. 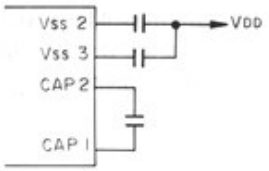
18	VDP (POWER-OUTPUT)	VARIABLE DUTY PORT (POWER-SUPPLY CONTROL SIGNAL)	Outputs the variable-duty or the one-bit (PG2) signal. The selection of either of them is programmable. When used as the VDP, this terminal transmits the pulse chain of 1.12 kHz continuously, and its duty can be selected from the available 64 steps. $\text{duty} = \frac{26.7\ \mu s}{893\ \mu s} \sim \frac{867\ \mu s}{893\ \mu s} = \frac{2}{67} \sim \frac{65}{67}$ This port can be used as a D/A converter by adding an integration circuit to this terminal.
19	CGP (MUTE/ BUZZER)	CLOCK GENERATOR PORT (MUTE/ BUZZER SIGNAL)	Outputs the clock-generator or the one-bit (PD3) signal. The selection of either of them is programmable. When used as the CGP, this terminal can transmit the pulse chain of 1 kHz of 46.6% duty or 3 kHz of 60% duty. In this set, this port outputs a signal to mute noises encoutered in the unlocked condition of the PLL. When the buzzer output is specified to be output in the alarm operation, this port outputs the buzzer signal of 1 kHz.
20	VDD	INPUT OF POWER SUPPLY VOLTAGE	Receives the power-supply voltage for this device. In operation, a voltage of 2.2 to 3.5 VDC is applied to this terminal. The input voltage can be lowered down to 2.0 VDC when any of the internal data in the RAM, i.e., when the CKSTP command is under execution, is to be holded. The power-on reset circuit of device starts to operate at the instance this terminal receives a voltage of 0 (zero) to 2.0 VDC, and the program starts from the location 0 (zero). Note: This pin and pin 46 are connected internally. So, it is not necessary to apply the power-supply voltage to both of them. The ceramic-packaged device, however, has a not-to-be connected pin 46, i.e., N.C. terminal.
21	M (FMC)	CONTROL-SIGNAL INPUT FOR DIVIDER	Determines the dividing ratio of the fixed-division prescaler. A 1/4 dividing ratio is made when this terminal is held at "H" (high), and a 1/2 divider is made when held at "L" (low). This port is used only when the VCOH terminal (FM in this set) i.e., pin 22 is used. This set uses this port as a 1/4 divider.
22	VCOH (FM IN)	FM OSC SIGNAL INPUT	Receives frequencies from 10 MHz to 130 MHz or from 10 MHz to 100 MHz both of a level of 0.2 Vp-p minimum from the local-oscillator output, i.e., the VCO output. This input signal is connected internally in this device through the 1/2 fixed-divider prescaler or the 1/4 fixed-divider prescaler and through the two-module prescaler composed of 1/32 and 1/33 frequency dividers to the internal programmable counter. This terminal is pulled down to the ground level when the direct frequency-dividing system is taken into the circuit or when the Pulse-Swallow system is used with the HF command executed, i.e., the VCOL (AM) terminal is selected. A capacitor coupling is needed due to the inclusion of alternate current amplifiers inside this device.

www.shortwaveradio.ch

<table>
<tr><th>PIN Nr.</th><th>SYMBOL</th><th>NAMING</th><th>DESCRIPTION</th></tr>
<tr><td>23</td><td>VCOL
(AM IN)</td><td>AM OSC
SIGNAL
INPUT</td><td>Receives an AM local-oscillator signals, i.e., the VCO signal from 0.5 MHz to 40 MHz of 0.2 Vp-p minimum.
This port is selected when the direct frequency-dividing system or the Pulse-Swallow system is used and, at the same time, the HF command is executed. These two systems are, however, different one another as shown below.
<table>
<tr><th>DIVIDING SYSTEM</th><th>INPUT LEVEL (MINIMUM)</th><th>INPUT FRE-QUENCY</th><th>DIVIDING RATIO</th></tr>
<tr><td>DIRECT</td><td>0.1 Vp-p</td><td>0.5 to 15 MHz</td><td>16 to (2^{12}-1)</td></tr>
<tr><td>PULSE-SWALLOW (HF COMMAND EXECUTED)</td><td>0.2 Vp-p</td><td>0.5 to 40 MHz</td><td>1,024 to (2^{17}-1)</td></tr>
</table>
This terminal is pulled down to the groung level when the Pulse-Swallow system is used together with the VHF-command execution, i.e., the VCOH (FM) terminal is selected.
A capacitor coupling is needed due to the inclusion of alternate current amplifiers inside this chip.</td></tr>
<tr><td>24</td><td>Vssl</td><td>GROUND</td><td>The ground-return terminal of this device.</td></tr>
<tr><td>25

26</td><td>E01

E02</td><td>ERROR OUTPUT

ERROR OUTPUT</td><td>Transmits the error signal of the PLL system. When the resultant frequencies obtained by dividing the local-oscillator frequencies are higher than the reference frequency, an "H" (high)-level signal is output from this port. When these are lower, on the contrary, an "L" (low)-level signal is output from this port. When these divided frequencies just coincide with the reference frequency, this port becomes in a floating state. These output signals from this port then go through the external lowpass filter to the varactor diodes in the tuned circuits in these frontends of the receiver. The same output waveform as the terminal E01 is obtainable from the next terminal E02, pin 26, and so these two are user-selectable. When the PLL is disabled, i.e., when the system is set by the PLL commands or the CE terminal, pin 27, is set to the "L" (low)-level, these E01 and E02 terminals become in the floating states.</td></tr>
<tr><td>27</td><td>CE</td><td>CHIP ENABLE</td><td>Receives the state-selection signals for this device.
When set at "H" (high), this device works, and vice versa. The PLL section of this device becomes forcively in a disabled condition in the duration of wider than 140 μsec of the "L" (low)-level state. The duration, however, of shorter than 140 μsec is not taken into account. The programmes are using the CKSTP commands. The CKSTP commands are effective only when the state of this CE is in an "L" (low) condition. When this CE terminal is in an "H" state, these programmes work like under NOP commands.
When the CKSTP commands are executed when this CE terminal is in an "L" (low) level, the internal clock generator and the internal CPU are disabled. In this disabled condition, the RAM-memory backupings can be made under a very-low current consumption of 3 μA maximum. In this condition, these display-output signals LCD1 through LCD16 and the COM1 COM3 become in the off-display mode, i.e., the "L" (low) state.
When the level of this CE terminal is changed from "L" to "H", this device is reset and its programmes start from the location "0" (zero). In this state, the Port A becomes in the input mode.</td></tr>
<tr><td>28
29</td><td>XO
XI</td><td>CRYSTAL OSCILLATOR</td><td>An external quartz-crystal oscillator connects to these terminals to obtain 75 kHz signal generator for the devices.</td></tr>
<tr><td>30
THRU
33</td><td>PA3
THRU
PA0</td><td>PORT A</td><td rowspan="5">4-bit I/O (Input/Output) ports. These ports enable the device designate input or output bit by bit. The each designation is, in turn, performed by the contents in the location "1FH" in the "BANK 0 (zero)" in the data memory (RAM), called as a "PAIO word". At these instances as the power-on, clock stoppage and the initial setting of the CE terminal from "L" to "H", these terminals automatically become in the input ports.
Under the port-operation commands like "IN", "OUT", "SPB", "RPB" commands, etc., the PA0 port coincides with the least significant bit of the registor or the operand, the PA3 coincides with the most-significant bit of them. The same applies to the port B and Port C respectively.

In this set, the PA3 (K-ENTER) port receives these return signals from the momentary ENTER and alternate BUZZER keys and the key matrix is as shown below.
<table>
<tr><th></th><th colspan="2">KEY SOURCE</th></tr>
<tr><th></th><th>DAT-S</th><th>RES-R</th></tr>
<tr><td>K-ENTER</td><td>ENTER</td><td>BUZZER</td></tr>
</table>
In this set, PA2 through PA0 are used to receive and transmit these signals to perform the readings of information from the tuning rotary encoder.</td></tr>
<tr><td>(30)

(31)

(32)

(33)</td><td>(K-ENTER)

(DAT-R)

(REQ-R)

(RES-R)</td><td>(ENTER-KEY IN)
(ENCODER DATA IN)
(ENCODER REQUEST)
(ENCODER RESET)</td></tr>
</table>

www.shortwaveradio.ch

PIN Nr.	SYMBOL	NAMING	DESCRIPTION
(cont'd)			input signals: data signal from the rotary encoder and request signal from the rotary encoder output signal: reset signal from the rotary encoder A partial circuit of the rotary encoder and these corresponding waveforms at each input or output terminal are those shown below. 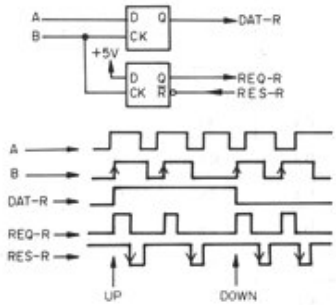
34 THRU 37	PB3 THRU PB0	PORT B	4-bit exclusive output ports. For ports PB0 and PB1, the sink current is minimized to a specially-low drain, so the PB0 and PB1 are able to be used as the return-signal sources for the key matrix. Accordingly, any of the reverse-current-preventive diodes can be eliminated when these PB0 and PB1 ports are used as the key-return-signal sources. When these ports are used as ordinal output ports, it will happen any of the low-level output signal will not be output properly depending upon the circuit employed, because of the low sink current. In these cases, pull-down resistors are used in these output lines. Under the port-operation commands like "IN", "OUT", "SOB", "RPB" commands, etc., the PA0 port coincides with the least significant bit of the registor or the operand, the PA3 coincides with the most-significant bit of them. The same applies to the Port B and Port C respectively. These exclusive output ports should be initialized using the programmes, because these ports output unstable and undefined output signals at the initial power-on condition, i.e., from "L" to "H". The output-data contents are the same as these previous last ones when the CE terminal changes from "L" to "H" or from "H" to "L", and when the CKSTP commands are under execution. Accordingly, the initialization with programmes is needed too where required. In this set, these ports are used as those shown in the parenthesises. The 40-bit frequency-position displaying information and the 8-bit band information are sent out to external circuits as serial data flows. The data and the clock signals are used in common for the band information (for IC201) and for the frequency-position information. A partial block diagram is shown blow. 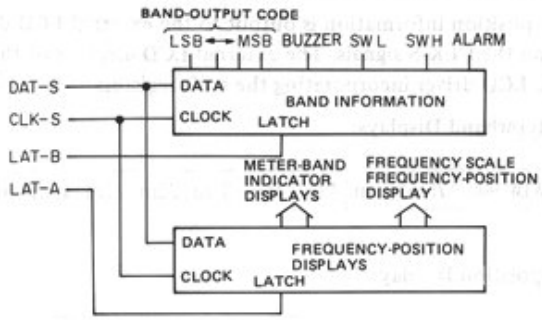
(34)	(LAT-B)	(LATCH SIGNAL) (BAND INFO.)	
(35)	(LAT-A)	(LATCH SIGNAL) (FREQ. POSITION DISPLAY)	
(36)	(DAT-S)	(DATA SIGNAL)	
(37)	(CLK-S)	(CLOCK SIGNAL)	

	CLOCK	LATCH
FREQUENCY POSITION DISPLAY	trailing edge	low level
BAND INFORMATION	leading edge	leading edge

Note: Frequency-position display turns on when the data is "1".

www.shortwaveradio.ch

PIN Nr.	SYMBOL	NAMING	DESCRIPTION
(cont'd)			

BAND (METERBAND)	BAND-OUTPUT CODE (BINARY) MSB←→LSB				SWH	SWL
LW/MW1/MW2	0	0	1	0	Low	High
SW (90m)	0	0	1	1	Low	High
SW (75m)	0	1	0	0	Low	High
SW (60m)	0	1	0	1	Low	High
SW (49m)	0	1	1	0	Low	High
SW (41m)	0	1	1	1	Low	High
SW (31m)	1	0	0	0	High	Low
SW (25m)	1	0	0	1	High	Low
SW (21m)	1	0	1	0	High	Low
SW (19m)	1	0	1	1	High	Low
SW (16m)	1	1	0	0	High	Low
SW (13m)	1	1	0	1	High	Low
SW (11m)	1	1	1	0	Low	High
FM1/FM2	1	1	1	1	Low	Low

NOTE: Also refer to 1-2-4. Description On Displaying Function on later pages.

PIN Nr.	SYMBOL	NAMING	DESCRIPTION
38 THRU 40	PC3 (KS3) THRU PC1 (KS1)	PORT C (KEY-MATRIX SIGNAL-SOURCE OUTPUT)	Refer to the PORT B outlined above. All the ports of this PORT C apply to the description for the PORT B. In this set, these ports output signals to be used as the signal sources for the key matrix.
41	NC	NO	This is a free terminal and is not connected to the internal circuits, and this terminal can be used as a junction land.
42	PC0 (KS0)	PORT C	Refer to description for pins 38 through 40 outlined above.
43 THRU 45	K3 THRU K1	KEY INPUTS	4-bit exclusive input ports. These are normally used as the key-matrix input terminals. When the KIN or the KI commands executed, the conditions of these pins are read into the RAM data memories designated by the operand portion of these commands. These ports are so configured that the port C and the LCD 9 LCD 16 can specifically be used as the key-return signal sources. When these LCD 9 through LCD 16 are used as the key sources, these keyed signals are output from these corresponding port every 6.7 msec while displaying keyed information on the display panel of the radio. Whether these keyed source signals are properly output or not is judged by the TKLT or the TKLF commands. Accordingly, it is requisite to execute the KI or the KIN commands after a proper command execution of TKLT or TKLF, i.e., after the solid confirmation of key-source signal outputs.
46	VDD		Same as pin 20.
47	K0		Same as pins 43 through 45.
48 THRU 53	LCD16 THRU LCD11		Same as pins 1 through 10.
54	NC		Same as pin 41.

1-2-3. ON THE KEY MATRIX

1) On The Key Matrix TABLE

The key matrix of this set is configured as shown below.

	K3 (PIN 43)	K2 (PIN 44)	K1 (PIN 45)	K0 (PIN 47)
KS3 (PIN 38) (PC3)	PRESET 5 (S216)	PRESET 4 (S215)	PRESET 3 (S214)	PRESET 2 (S213)
KS2 (PIN 39) (PC2)	PRESET 1 (S212)	FM (S211)	LW/MW (S210)	SW (S209)
KS1 (PIN 40) (PC1)	ALARM (S208)	CLOCK (S207)	DOWN (S206)	UP (S205)
KS0 (PIN 42) (PC0)	STANDBY(S204)	KEY PROTECT (S203)	SLEEP (S202)	ON/OFF (S201)
DAT-S (PIN 36) (PB1)			FM/FM2* (JUMPER)	MW1/MW2* (DIODE)

	K-ENTER (PIN 30) (PA 3)
DAT-S(PIN 36)(PB1)	ENTER (S217)
RES-R(PIN 33)(PA0)	BUZZER** (S220)

* : initially set by diodes
** : alternate key
no mark : momentary keys

www.shortwaveradio.ch

2) On The Initial-state Setting Diodes:

The FM-band frequency-coverage switching diode D202 and the MW-band channel-separation diode D203, i.e., the initial-state determining diodes are read only at the initial power-supply leading edge and at the moment when the CE (Chip Enable) terminal changes from "L" (low) to "H" (high) state. Diode D202 is solder bridge selected, and diode D203 is slide-switch selected by the MW CH STEP switch S218 as outlined below. Both of these selecting parts are installed on the key board. The solder bridging is factory selected for the specific destinations, and the MW CH STEP switch is selectable by the user from the battery compartment.

<table>
<tr><th>KEY</th><th>FUNCTION</th><th>DESCRIPTION</th></tr>
<tr><td>FM1/FM2
(solder-bridge)</td><td>FM band frequency coverage change (D202)</td><td>FM-band frequency coverage can be changed as follows.
<table>
<tr><th>Bridge condition</th><th>Coverage</th></tr>
<tr><td>shorted</td><td>87.50MHz – 108.00MHz</td></tr>
<tr><td>opened</td><td>76.00MHz – 108.00MHz</td></tr>
</table></td></tr>
<tr><td>MW1/MW2
(MW CH STEP
switch S218)</td><td>MW-band frequency coverage and channel separation changes (D203)</td><td>MW-band frequency coverage and channel separation can be changed as follows.
<table>
<tr><th>S218</th><th>Coverage</th><th>Separation</th></tr>
<tr><td>shorted</td><td>530kHz–1700kHz</td><td>5 kHz</td></tr>
<tr><td>opened</td><td>531kHz–1602kHz</td><td>3 kHz</td></tr>
</table></td></tr>
</table>

3) On The Alternate BUZZER Key (S220):

KEY	FUNCTION	DESCRIPTION
BUZZER	Buzzer output/radio output changeover (S220)	a) When the ALARM switch S208 is turned on, the ALARM switch S220 determines either of the buzzer or radio output. When S220 is shorted, the buzzer output is obtained and the LCD displays "BUZZER". When S220 is turned to RADIO, "BUZZER" display disappears. b) The BUZZER-RADIO changeover can be made anytime. During the BUZZER on condition, however, the BUZZER-RADIO changeover (BUZZER to RADIO or RADIO TO BUZZER) cannot be performed, though the LCD display changes.

4) On the Mometary Keys:

As outlined above in 1), Key Matrix Table, there are 17 (seventeen) momentary key switches. These key switches work under the following four conditions.

a) Always seeing the input conditions.

b) When being pushed, each key performs its function as a most-new information, and all the previous operations cease.

c) First in, first served. The duplicate key pressings one after another at a time are prohibited. When a second or third key is or are pressed while a first key is kept pressed, these second or third key or keys are negrected.

d) When two or more than three keys are just simultaneously pressed, a function of higher priority key is selected.

www.shortwaveradio.ch

KEY	FUNCTION	DESCRIPTION
PRESET 1 THROUGH PRESET 5	To Designate A Preset Memory	These keys designate the number of the preset memory to be called and written. a) In case of calling a preset memory: Calls frequency data memorized in the PRESET memory designated by a key, and receives that frequency. In SW bands, the data for the meter band are also called. The LCD display displays "PRESET" and the preset-memory number. b) In case of writing a preset memory: When one of these PRESET keys is pressed while depressing the "ENTER" key, the frequency data of the receiving frequency are written in the designated or selected preset memory channel, and the display displays the "PRESET" and the memory number on it. These "PRESET" and memory number displays on the LCD disappear when the rotary encoder is rotated and the receiving frequency is changed, receiving band is changed or when the radio is turned off.
FM LW/MW SW	Band Change	When one of these keys is pressed, the receiving band becomes in that band pressed. And the receiving frequency becomes in the last channel memorized in the system. When the same band key is pressed as the band now receiving, the second pressing is negrected.
UP (⇨) DOWN (⇦)	Shortwave Meterband Change	The shortwave receiving spectrum is divided into 12 (twelve) broadcast bands. Each band up to 41-meter band is further divided into 104 channels, and each band up to 13-meter band is further divided into 128 channels. The 11-meter band is divided into 126 channel. a) When the "UP" key is pressed while receiving a shortwave band, the receiving band changes to the next higher band successively. When the SW12 (11-meter) band is reached, however, the band changes to the lowest band, i.e., SW1 (90-meter) band. The band indicator on the LCD moves appropriately each time the band is changed. b) When the "DOWN" key is pressed while receiving a shortwave band, the receiving band changes to the next adjacent lower band successively. When the SW1 (90-meter) band is reached, however, the band changes to the highest band, i.e., SW12 (11-meter) band. The band indicator on the LCD moves appropriately each time the band is changed. c) When the "UP" or "DOWN" key is kept depressed approximately for more than 500 msec, the band changes up or down to the adjacent band at an interval of approximately 250 msec until the lowest or the highest band is reached at which the band changing ceases. d) When the SW band is changed up and down, the receiver receives the same channel number allocated for this receiver as the last channel of the last band. When the band is changed from SW6 (31-meter) to SW5 (41-meter) and the receiving channel has been higher than the channel 104, however, the receiver receives the channel 104, i.e., the highest channel of these lower shortwave band group of this receiver. When the band is changed from SW12 (11-meter) to SW1 (90-meter) band and the receiving channel has been higher than the channel 102, the receiver receives the channel 102.
CLOCK	Clock Indication and Timer Setting	a) When the "CLOCK" key is pressed, the "CLOCK" indication goes on on the LCD and the present time is displayed on the LCD at the same time. When the "CLOCK"-key depression is released, these "CLOCK" and time displays disappear, and the displays go back to these ones which had been displayed prior to the "CLOCK"-key depression. b) Clock-timer setting is made by turning the "TUNING/TIME ADJ" knob with the "CLOCK" key kept depressed. The timer counter stops counting at the instance the time is set and the "second" resetting is made. c) Entries of other keys during the clock-time setting are prohibited. d) When the time coincides with the alarm time during the clock time setting, the set does not change its function.
ALARM	Alarm-time Indication and Alarm-time Setting	a) When the "ALARM" key is pressed, the "ALARM" indication goes on on the LCD and the present time is displayed on the LCD at the same time. When the "ALARM"-key depression is released, these "ALARM" and time displays disappear, and the displays go back to these ones which had been displayed prior to the "ALARM"-key depression. b) Alarm-time setting is made by turning the "TURNING/TIME ADJ" knob with the "ALARM" key kept depressed. c) Entries of other keys during the alarm-time setting are prohibited. d) When the time coincides with the clocktime during the alarm-time setting, the set does not change its function.
STANDBY	ON-OFF of Standby Condition	By pressing this key, cyclic or alternate on-off state of the standby condition is made. When the set is in the standby condition, the LCD displays the "STANDBY" on it. (cont'd)

www.shortwaveradio.ch

KEY	FUNCTION	DESCRIPTION
STANDBY (cont'd)	ON-OFF of Standby Condition	a) When the set is in the not-standby condition, the set does not change its present state even when the clock time and alarm time coincide with each other. b) When the set is in the standby condition, the alarming operation acts when the clock time coincides with the alarm time. When the "ALARM" switch has been set to the "BUZZER" side, the set outputs the alarming tone for the sleep period of approximately 65 minutes. When the "KEY PROTECT" is on in this condition, the alarm is released. When the "ALARM" switch S220 has been set to the "RADIO" side in the above condition, the set turns its radio on for the sleep period of approximately 65 minutes. c) When the "ON/OFF" (ALARM OFF) switch S201 is pressed during the set is outputting the alarm sound, the set turns the alarm function off, and thus turns the radio off. However, the set does not turn the stand-by function off. When the "STANDBY" key is pressed in the above condition, both the standby and alarm functions are turned off, and thus the radio is turned off. d) During the radio-alarm condition with the "ALARM" switch S220 set to the "RADIO" side, all of the radio functions becomes in the same as when the radio is simply turned on. When the "ON/OFF" switch S201 is pressed, the set turns the alarming function off, and also turns the radio off. When the "STANDBY" key is pressed in the above condition, the set turns the alarm and standby functions off, and also turns the radio off. e) The alarm function acts regardless of the conditions of radio on/off and during the alarm or sleep operation, and the LCD displays "SLEEP" on it.
SLEEP	Sleep-time Setting	In any mode with the "MAIN POWER" switch S219 turned on, the LCD displays "SLEEP" on it when the "SLLEEP" key is pressed, and the set becomes in the sleep operation. The set turns off after the sleep opera-tion of 65 minutes. In this condition, the "SLEEP" display disappears from the LCD, and the sleep operation turns off or is released. a) When the "SLEEP" key is pressed in the radio-off state, the radio turns on first and then the sleep function is initiated. b) When the "SLEEP" key is re-pressed in the sleep operation, the sleep time should be re-set. When the "SLEEP" key is pressed in the alarm operation, the alarm function is turned off and the sleep operation becomes effective. c) When the "ON/OFF (ALARM OFF)" key is pressed during the sleep operation, the sleep operation is released or turns off, and the radio turns off.
KEY PROTECT	Key Protection	The key protection is made by using the "KEY PROTECT" key. The on and off of the key-protection state is made available cyclickly as the "KEY PROTECT" key is pressed successively. When the "KEY PROTECT" key is pressed and the key mark is displayed on the LCD, no other key entries including the "TUNING" control (rotary encoder) are accepted than the "KEY PROTECT" key. This IC, however, accepts the switching at the CE terminal, pin 27. When the CE terminal is turned off, i.e., the "MAIN POWER" switch S219 is turned off, the key protection is also turned off.
ON/OFF (ALARM OFF)	Radio On-Off, (Alarm Off) Switching	The on and off of the radio is made effective cyclically by pressing the "ON/OFF (ALARM OFF)" key successively. When the radio is turned on, the set receives the frequency written in the last-channel location in the memory. When the radio is turned off, this IC writes the band and frequency of now receiving in the last-channel location in its internal memories, and the display on the LCD changes from the frequency to the time of the present, i.e., of the instance the ON/OFF key is just pressed.

www.shortwaveradio.ch

1-2-4. DESCRIPTION ON DISPLAYING FUNCTION

1) Format of the Output Signals for the LCD:

The following table shows the LCD segment/common output signals in conjunctions with the figures and letters on the LCD panel.

PIN Nr.	SYMBOL	FUNCTION			FIGURES/LETTERS DISPLAYED		
		COM 3	COM 2	COM 1			
13	COM1						
12	COM2						
11	COM3				COM 3	COM 2	COM 1
10	LCD1	c_A	b_A	a_A	5	3	2
9	LCD2	d_A	g_A	f_A	4	1	MEMORY
8	LCD3	e_A	g_B	e_B		CLOCK	ALARM
7	LCD4	b_B	f_B	b_8	kHz	MHz	
6	LCD5	e_8	g_8	f_8	NOTE 1	(FM-50kHz)	
5	LCD6	c_6	b_6	a_6	(FM-0.1MHz)		
4	LCD7	d_5	g_6	f_6			
3	LCD8	a_7	e_6	b_4	·		
2	LCD9	c_4	g_4	a_4	(FM-1MHz)		
1	LCD10	d_4	e_4	f_4			
53	LCD11	d_7	b_2	d_5	:		
52	LCD12	c_2	g_2	a_2	(FM-10MHz)		
51	LCD13	d_2	e_2	f_2			
50	LCD14	c_0	b_0	a_0	(FM-100MHz)		NOTE 2
49	LCD15	b_1	c_5	a_5	ON	OFF	STANDBY
48	LCD16	e_1	g_1	f_1	BUZZER	KEY PROTECT	SLEEP

Designations of the 7 (seven) segments:

NOTE 1: The segment f8 is also connected to the displaying segments a, c and d.
NOTE 2: The segment a0 is also connected to the displaying segments d, e and g.

2) Description On the External LCD Displays:

The frequency-position information is output to the external LCD display in the manner of serial data by utilizing the LAT-A, DAT-S and the CLK-S signals. The external LCD displays of the SW indication, meterband and the frequency are, in turn, made by the LCD driver incorporating the shift registers.

a) Band and Meterband Displays:

FM	MW/LW	90m	75m	60m	49m	41m	31m	25m	21m	19m	16m	13m	11m

LSB MSB

b) Frequency-position Display:

1	2	3	4	5	6	7	8	9	10	11	12	13	14	15	16	17	18	19	20	21	22	23	24	25	26

LSB MSB

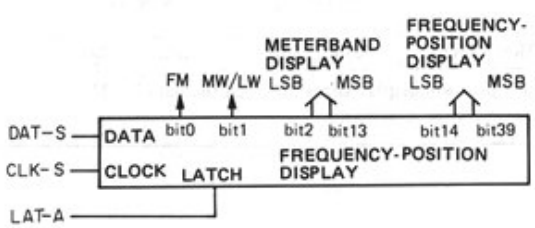

OUTPUTTING SEQUENCE:

1. Muting turns on.
2. Outputs value of N of PLL.
3. Displays frequency.
4. Outputs band code. Muting is off during outputting.
5. Displays dial scale.

www.shortwaveradio.ch

1-2-5. INITIAL-STATE SETTING

1) Initial Power-on Setting:

VDD = 0 V → 3.0 V, CE = Low → High

The power-supply is reset after performing the initial power-on setting, and the following operations are made.

a) The power-out terminal becomes in "L" (low) state, i.e., power off, and reads the initial-state setting diodes.

b) Initializes the preset-memories contents of each band (FM, SW or MW) to its lowest frequency. In case of SW band, to that of the 90-meter band.

c) Initializes the last-channel memories contents of each band (FM, SW or MW) to its lowest frequency. To that of the 90-meter band in case of SW band.

d) Sets the clock and alarm time to "0:00", and resets the "second" starting.

e) Outputs the serial data to turn off all the frequency displays from the LCD, and the LCD displays the following clock display.

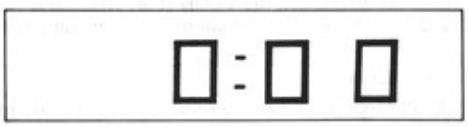

(24-hour system)

2) Backup Condition:

CE = Low

The backup state is made when the CE terminal becomes in "L" (low) state. In the backup state, the program routines are intermittently performed to eliminate the current drain by using the "HALT" command. The operation routine is as follows.

a) The PLL is disabled.

b) All the ports are made into "L" (low) state.

c) All the external LCD displays are turned off except the clock display.

Note: The same operations are made in the radio-off state when CE is "H" (high). In this condition, however, only PA0 is "H" (high), i.e., it is seeing the buzzer switch.

1-2-6. MUTING-OUTPUT TIMINGS

1) MUTE-OUTPUT

The muting-output timings are classified as follows.

1) Approximately 15 (fifteen) ms chattering waiting time at key-on instance.

2) Range checkings and N-value calcuration, and the PLL-data outputting.

3) Data-transferring periods to the LCD display data and to the external LCD displays, key-off detections and the CE-terminal checking.

a) Radio On

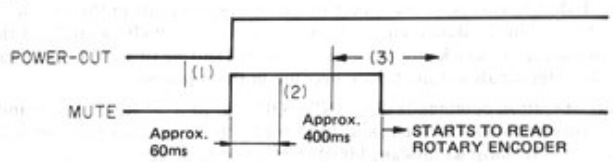

b) Radio Off

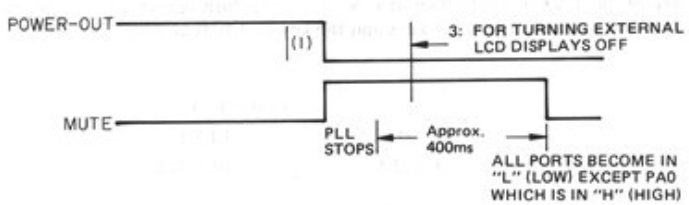

www.shortwaveradio.ch

c) Preset-memory Callings, Band Changings and Meterband Changings:

c-1) One-time Key Hitting:

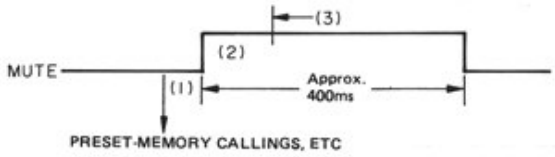

c-2) Meterband Changings with ← or → Switch Kept Depressed (Continuous/Successive Changings)

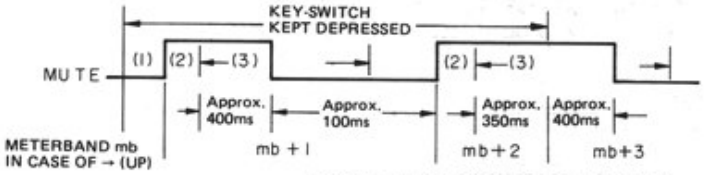

NOTE: mb MEANS THE METERBAND NOW RECEIVING

d) Station Selection with Rotary Encoder:

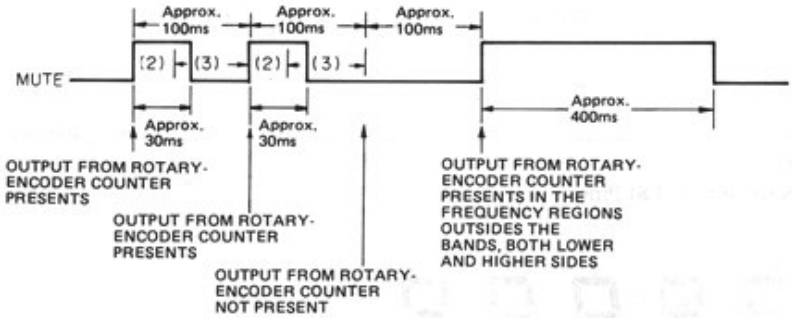

e) Power On by Alarm Operation

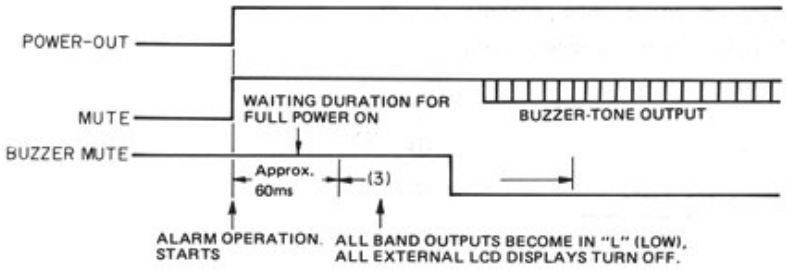

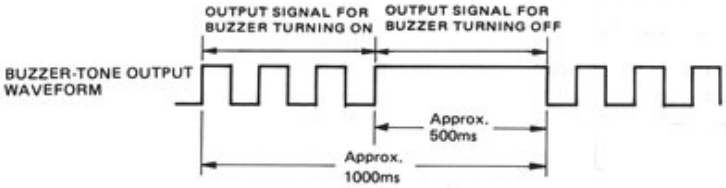

www.shortwaveradio.ch

1-3. OUTLINE OF TERMINALS OF THE LCD DOT-MATRIX SEGMENT DRIVER IC202, MSM5259GS

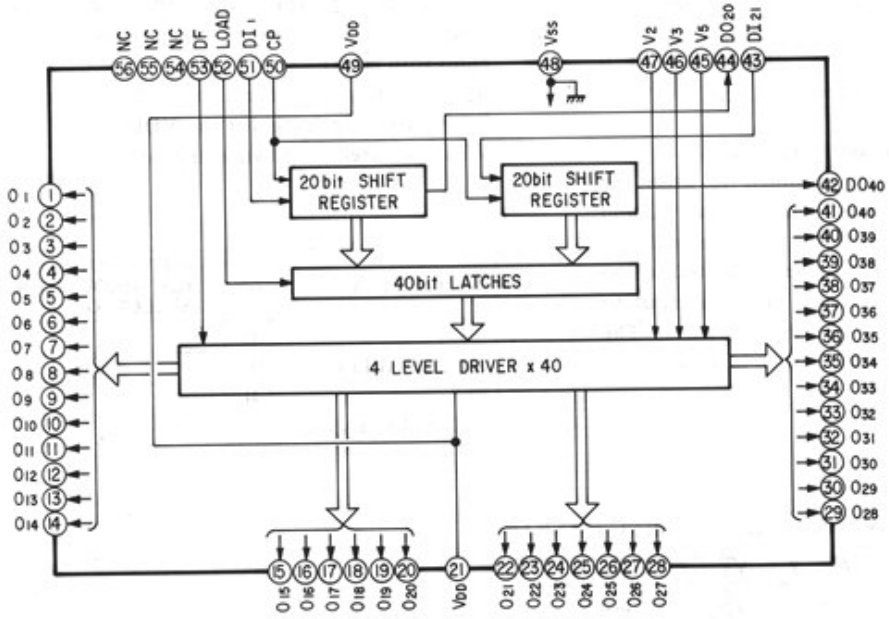

- **Pin 51 (DI1)**
  Receives data from the shift registor of the first through twentieth bit, and accepts display data synchronizing with the clock signal in accordance with the truth values.

- **Pin 50 (CP)**
  Receives the clock pulse of the shift registors, and the data are shifted at the trailing edge of the clock pulses. A setting-up and holding durations are required in between the DI1 mentioned above and this signal CP. The risetime and the falltime of the clock pulse are to be less than 1 μ sec.

- **Pin 44 (DO20)**
  Transmits the twentieth bit of the shift registor. Data received at the DI1 mentioned above are transmitted from this terminal being delayed with the duration of twenty bits of the shift registor and, at the same time, synchronized with the clock pulse.
  When this terminal is connected to the DI21 terminal, pin 43, a 40-bit shift registor is made.

- **Pin 43 (DI21)**
  Receives data of twenty-first through fourty-first bits of the shift registor. When this terminal is connected to the DO20 terminal, pin 44, as mentioned above, a 40-bit shift registor is made.

- **Pin 42 (DO40)**
  Transmits the fourtieth bit of the shift registor. Data received at the DI21 mentioned above are transmitted from this terminal being delayed with the duration of twenty bits of the shift registor and, at the same time, synchronized with the clock pulse.
  When an expansion of handling the numbers of characters is needed, a cascading connection to the next stage is required.

- **Pin 53 (DF)**
  Receives a signal to accommodate the alternating-current synchronization for the waveforms of the LCD-driving signals.

- **Pin 52 (LOAD)**
  Input terminal to latch the contents of the shift registor. In the high ("H") conditions, the contents in the shift registor are transfered through the level shifter to the four level drivers.
  In the low ("L") state on the contrary, this terminal retaines the last data of them in the high ("H") state, and thus the outputs from terminals 01 through 040 do not change even when the contents in the shift registors are changed.

www.shortwaveradio.ch

- **Pin 49 (VDD) and Pin 48 (VSS):**
  Pin 49 (VDD) is the power-supply voltage input terminal of this IC, and it receives voltage nominally in the range of 2.5 VDC to 6.0 VDC.
  Pin 48 is the grounding terminal of this IC, it connects to the ground foil, i.e., VSS = 0 VDC.

- **Pin 7 (V2), Pin 6 (V3) and Pin 5 (V5)**
  The bias-voltage supply terminals to drive the LCD. When static displays are required, V2 and V5 are to be connected to the VSS terminal, and at the same time, V3 is to be connected to the VDD terminal. The common signal is input to the DF terminal and the buffer gates. The COMMON signal to drive the LCD is made through the buffer gates.

- **Pins 1 through 20 (O1 through O20) and Pins 22 through 41 (O20 through O40):**
  Output driving signals from the internal four-level drivers. Each output signal directly coincides with each bit.
  By combining the contents of the latches and the DF signal, four levels for the VDD, V2, V3 and V5 are selected as shown in the table.

LATCH DATA	DF	DRIVE OUTPUT (O1 THROUGH O40) SELECTED
"H"	H	V5
(SELECTABLE)	L	VDD
"L"	H	V3
(NONSELECTABLE)	L	V2

TIMING CHARTS

DATA-TRANSFERRING TIMING CHART:

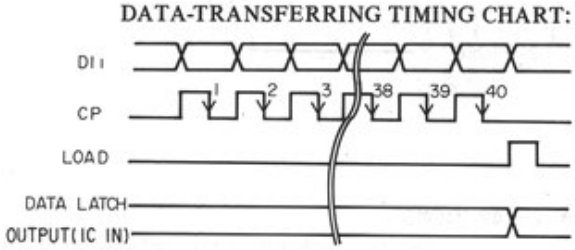

TIMING CHART IN STATIC FORM:

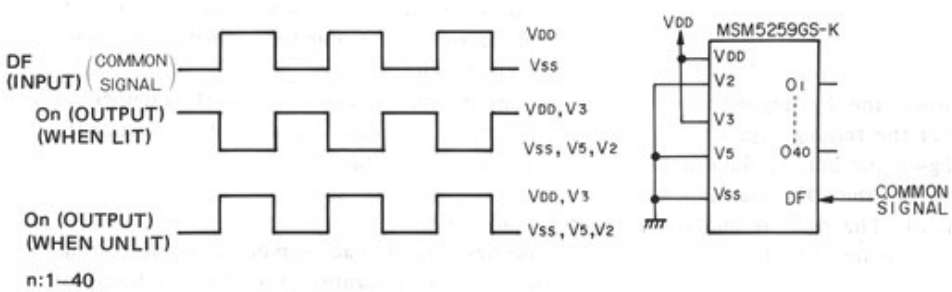

PARTIAL DISPLAYING CIRCUIT (EXAMPLE)

In case of the statical display, LCD-drive bias supplies V2 and V5 are to be connected to VSS, and further, V3 is connected to VDD terminal. Then, the common signal is input to the DF terminal, and also input to the common terminal of the LCD panel through the buffer gates.

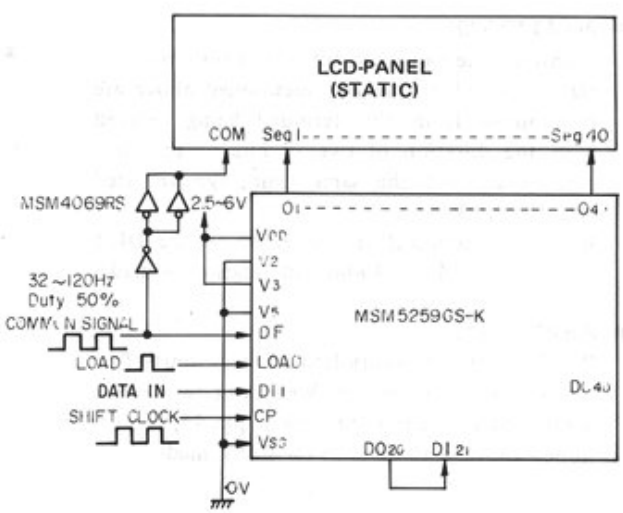

www.shortwaveradio.ch

1-4. ON THE NEW LCD PANEL, LCD1

This radio uses a new liquid-crystal display panel incorporating dial pointer itself, band indicator, ordinal frequency and clock indicators, etc. The outline of this LCD is as follows.

1) Outline of Pinouts:

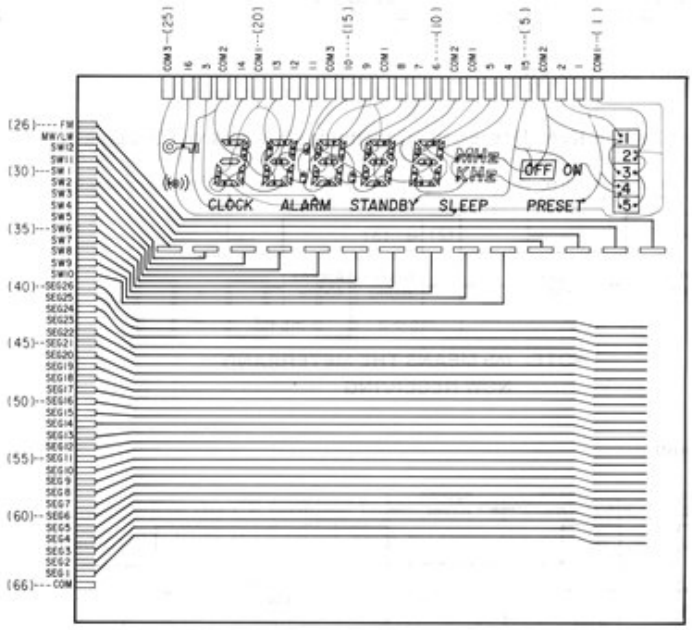

( ): TERMINAL NR. OF LCD

2) Relationship of LCD Segments to LSI Pins:

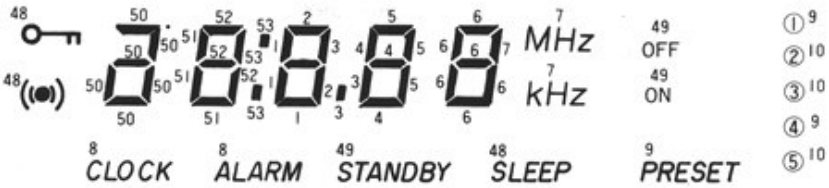

Checking Example: Check pin 8 of IC201 when the "CLOCK" display is not obtained properly.

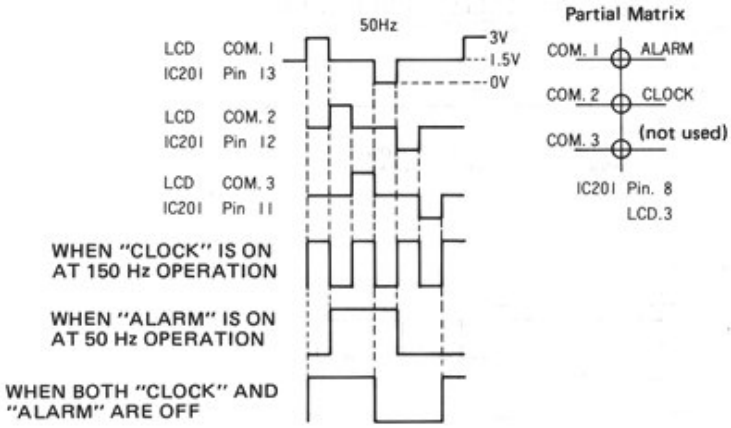

3) Dial-pointer Movement:

The LCD dial pointer moves up or down as the TUNING knob is rotated in 24 kHz in LW band, 20 kHz in SW1 thru SW6, 25 kHz in SW7 thru SW12 and in 1.3 MHz step in FM band except these upper and lower band edges at where the pointer moves irregularly as in the MW band.

www.shortwaveradio.ch

SECTION 2
ELECTRICAL ADJUSTMENTS

PREPARATIONS:

Controls and switches should be set as follows unless otherwise noted.

POWER switch: ON
MAIN POWER switch: ON
TONE switch: as required
All key switches: as directed
VOLUME control: as required

Key board —component side—

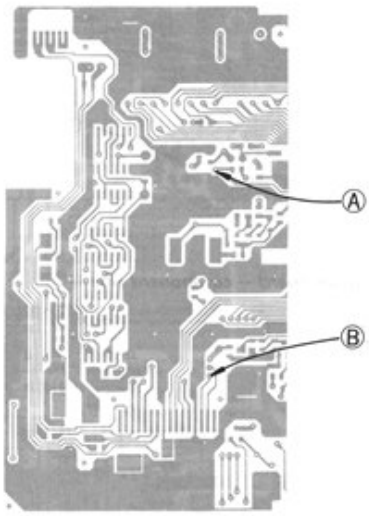

main board

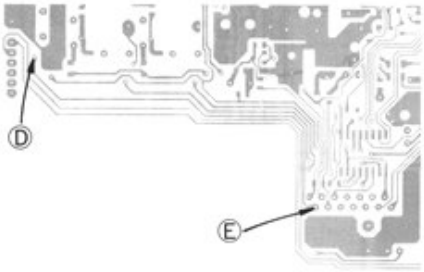

Procedure:

1. Adjust CT201 so that the reading on the frequency counter becomes in 10.860000 MHz (10.710 MHz + 0.150 MHz).
2. Hit the FM button. The band should become in FM and the frequency on the LCD panel of the set should be 76.00 MHz (US, Canadian model) or 87.5 MHz (AEP, UK, E, AUS) model.
3. Hit the SW button. The band should become in the SW1 and the frequency on the LCD panel of the set should be 3,050 kHz.

CLOCK-FREQUENCY ADJUSTMENT

NOTE: This adjustment is needed to these sets bearing serial numbers up to 7901.
These sets bearing serial numbers 7902 and up are not equipped with the adjustment trimmer.
Refer to the mounting and schematic diagrams.

MAIN POWER SWITCH: ON
POWER SWITCH: ON
BAND: MW/LW
FREQUENCY: 150 kHz

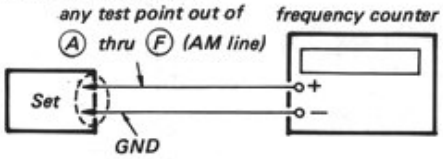

key board —jumper-foil side—

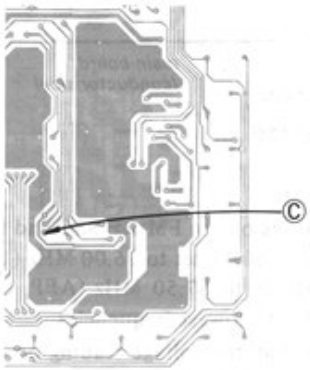

main board

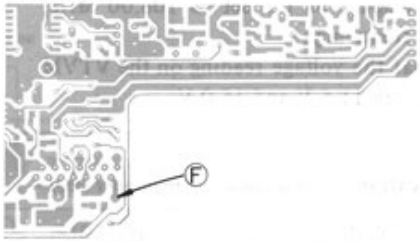

Adjustment Location: *— key board —*

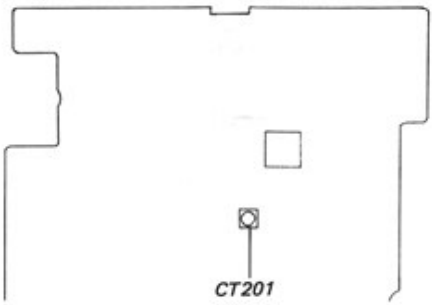

www.shortwaveradio.ch

FM FREQUENCY-COVERAGE (VCO VOLTAGE) ADJUSTMENT

Setup:

Band: FM

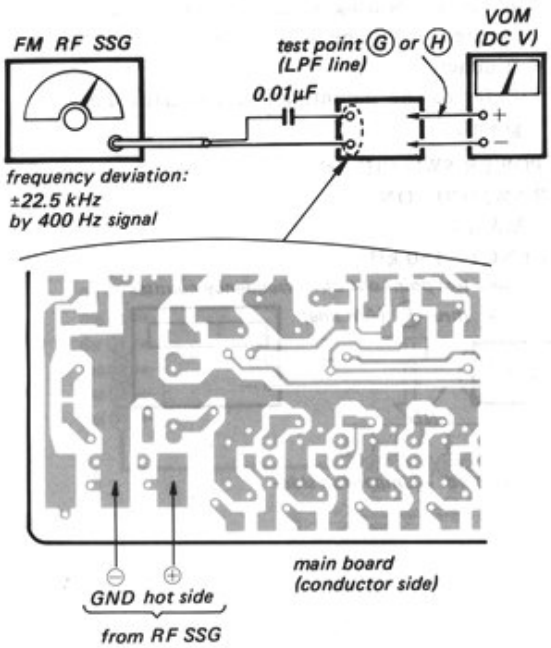

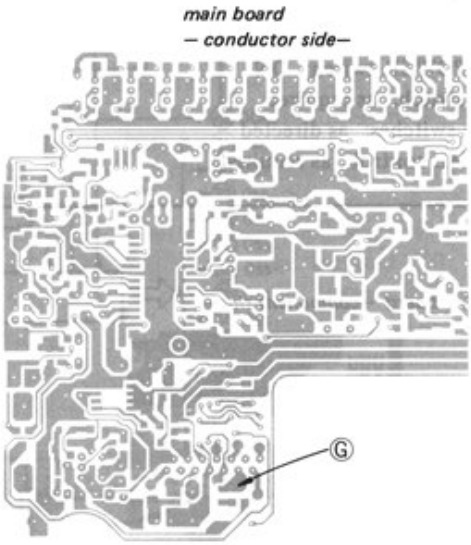

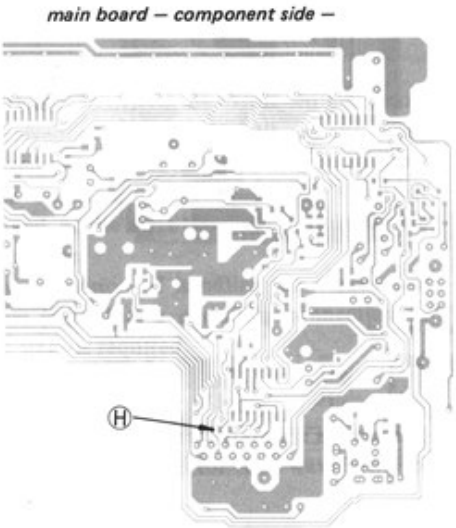

Procedure:

1. Set the frequencies of the FM RF SSG and the frequency display of the set to 76.00 MHz (US, Canadian model) or to 87.50 MHz (AEP, UK, E, AUS, model), the lowest frequencies.
2. Adjust L28 so that the voltage reading on the VTVM becomes in 2.5 V ± 0.1 V.
3. Set the frequencies of the FM RF SSG and the frequency display of the set to 108.00 MHz, the highest frequency.
4. Confirm that the voltage reading on the VTVM is now between 11.5 V and 15.0 V.

Adjustment Location: *— main board (component side) —*

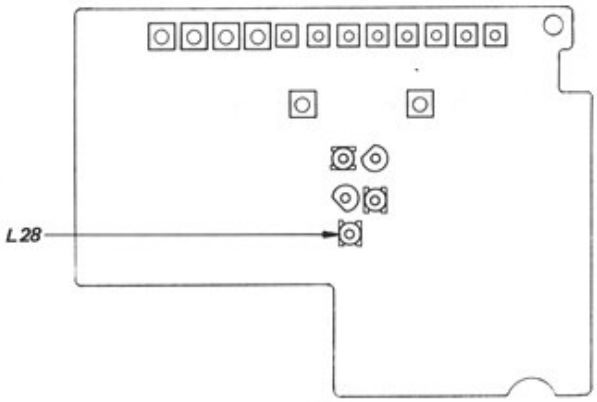

www.shortwaveradio.ch

FM TRACKING ADJUSTMENT

NOTE: This adjustment should be performed after the FM FREQUENCY-COVERAGE ADJUSTMENT.

Setup:

Band: FM

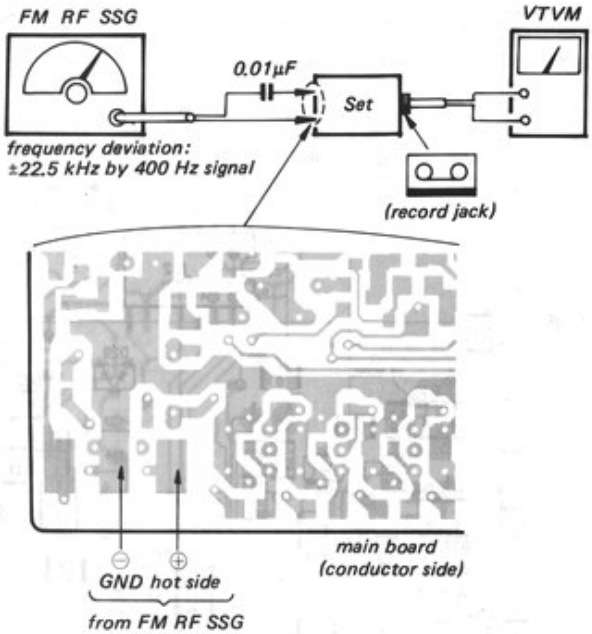

Procedure:

1. Set the frequencies of the FM RF SSG and the frequency display of the set to 76.00 MHz (US, Canadian) or to 87.50 MHz (AEP, UK, E, AUS) the lowest frequency.
2. Adjust L26 and L27 to obtain a maximum output level on the VTVM.
3. Set the frequencies of the FM RF SSG and the frequency display of the set to 108.00 MHz, the highest frequency.
4. Adjust CT1 and CT2 to obtain a maximum output level on the VTVM.
5. Repeat the above steps several times, and finish the adjustment with the trimmers CT1 and CT2.

Adjustment Location: *– main board (component side) –*

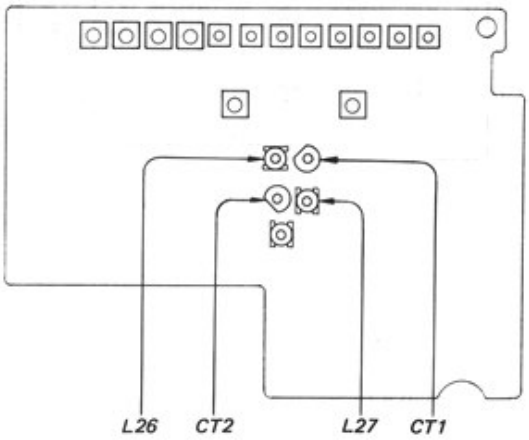

www.shortwaveradio.ch

AM I-F ADJUSTMENT

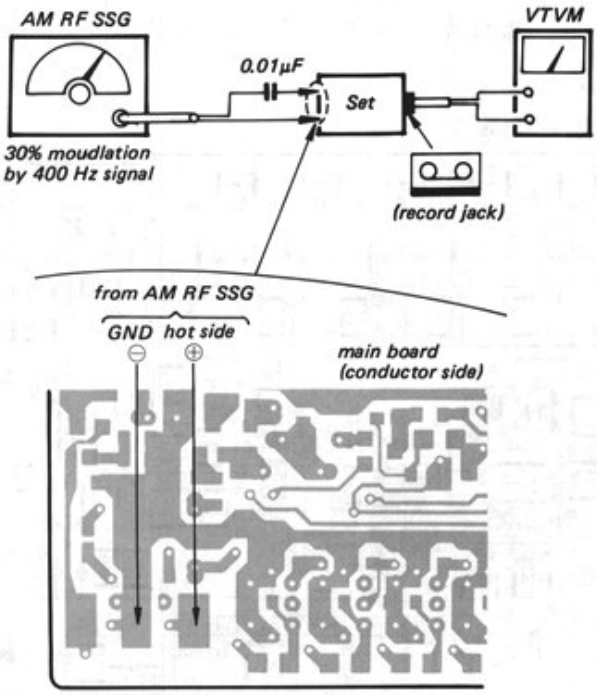

② AM 1st I-F ADJUSTMENT
Adjust for a maximum reading on the VTVM.
Band: SW1 Frequency: any place
10.71 MHz
T1

① AM 2nd I-F ADJUSTMENT
Adjust for a maximum reading on the VTVM.
Band: MW/LW Frequency: 150 kHz
455kHz
T2

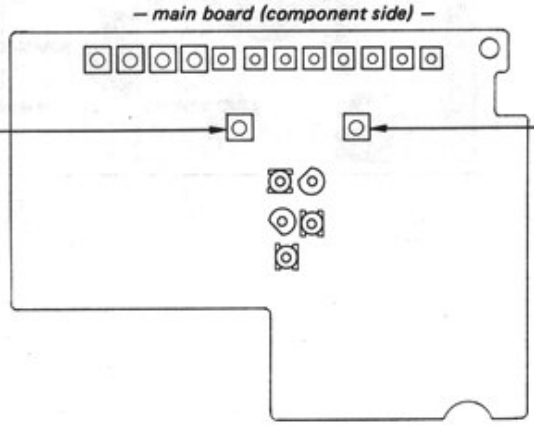

www.shortwaveradio.ch

SW TRACKING ADJUSTMENT

Setup:

Band: SW1 thru SW12

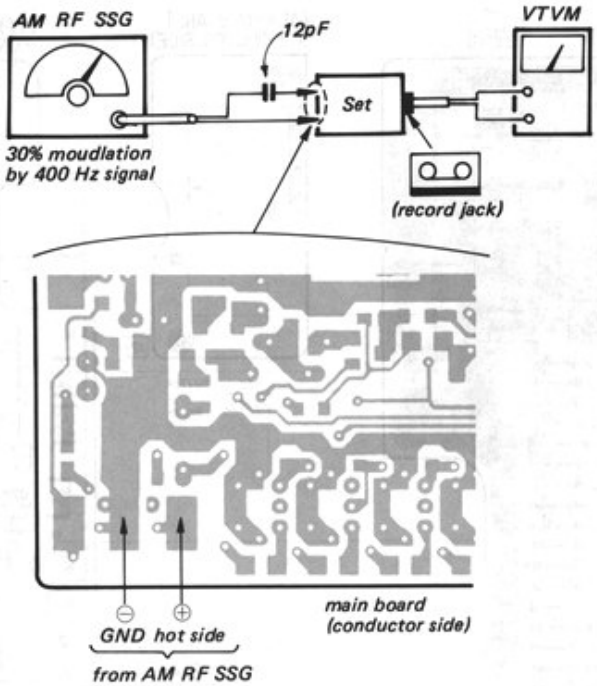

Procedure and Adjustment Location:

1. Check and verify the VCO voltages on the LPF line at both the lowest and highest frequency points as shown. See page 20 for the LPF line.

LOW ENDS	HIGH ENDS
VCO(L) : 150kHz VCO(H) : 9,375kHz	VCO(L) : 7,465kHz VCO(H) : 21,960 kHz
1.50~2.00V	12.5~15.5V

VCO(L) : MW/LW~SW5, SW12
VCO(H) : SW6~SW11

Adjust for a maximum reading on the VTVM.		
SW1	3,300kHz	L2
SW2	3,950kHz	L3
SW3	4,900kHz	L4
SW4	6,050kHz	L5
SW5	7,200kHz	L6
SW6	9,700kHz	L7
SW7	11,850kHz	L8
SW8	13,700kHz	L9
SW9	15,300kHz	L10
SW10	17,800kHz	L11
SW11	21,600kHz	L12
SW12	25,800kHz	L13

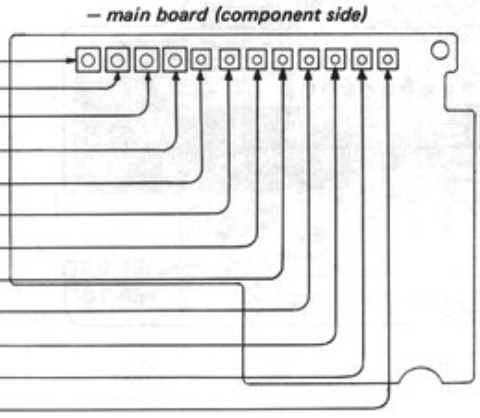

AM AGC ADJUS

NOTE: This adju
bearing t
The adj
equipped
numbers

Setup:

Band: SW1

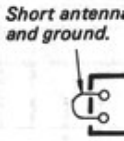

Procedure:

Adjust RV2 to ob
digital voltmeter.

Adjustment Locat

www.shortwaveradio.ch

AM AGC ADJUSTMENT

NOTE: This adjustment is needed only for the set bearing these serial numbers 7902 and up. The adjustment control RV2 is not equipped in these sets bearing the serial numbers up to 7901.

Setup:

Band: SW1

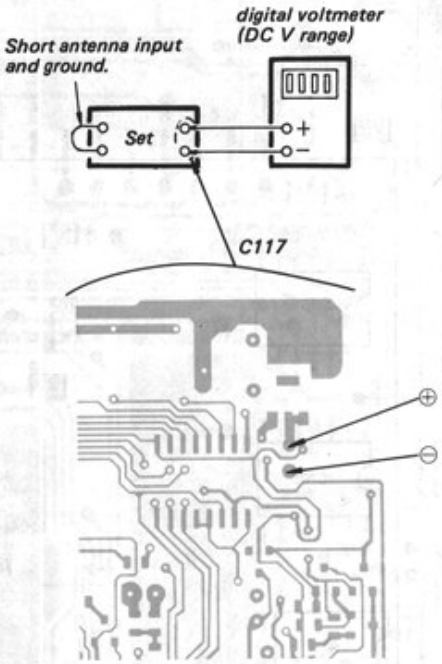

Procedure:

Adjust RV2 to obtain a 1.275 V (±0.003 V) on the digital voltmeter.

Adjustment Location: *– main board (component side) –*

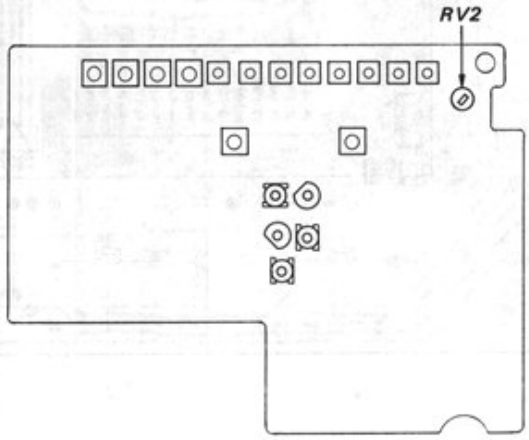

DC-DC CONVERTER CHECK

Setup:

MAIN POWER switch: ON
POWER switch: ON

Procedure

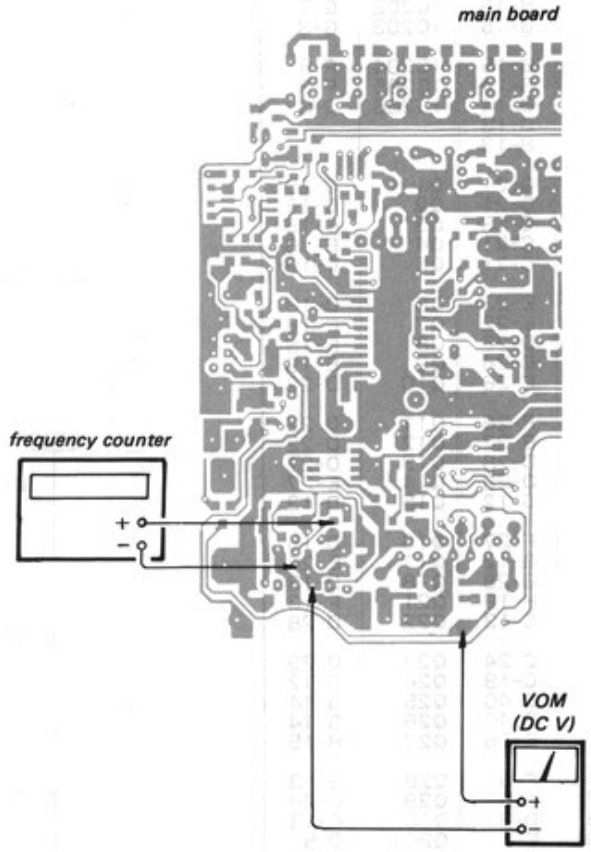

Specification:

frequency: 1,750 kHz to 1,900 kHz
DC voltage: 16.5 V to 17.5 V

www.shortwaveradio.ch

DC-DC CONVERTER CHECK

Setup:

MAIN POWER switch: ON
POWER switch: ON

Procedure

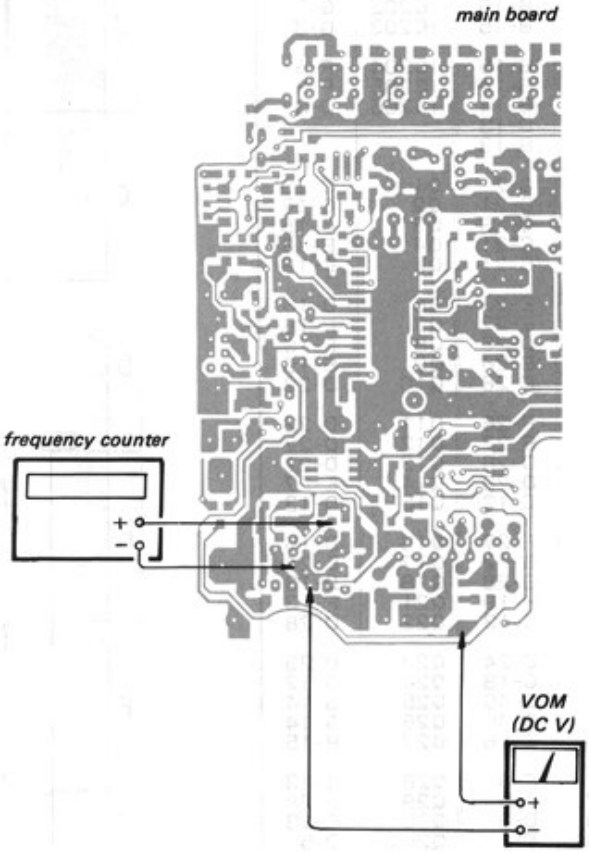

Specification:

frequency: 1,750 kHz to 1,900 kHz
DC voltage: 16.5 V to 17.5 V

SECTION 3
DIAGRAMS

3-1. SEMICONDUCTORS LEAD LAYOUTS

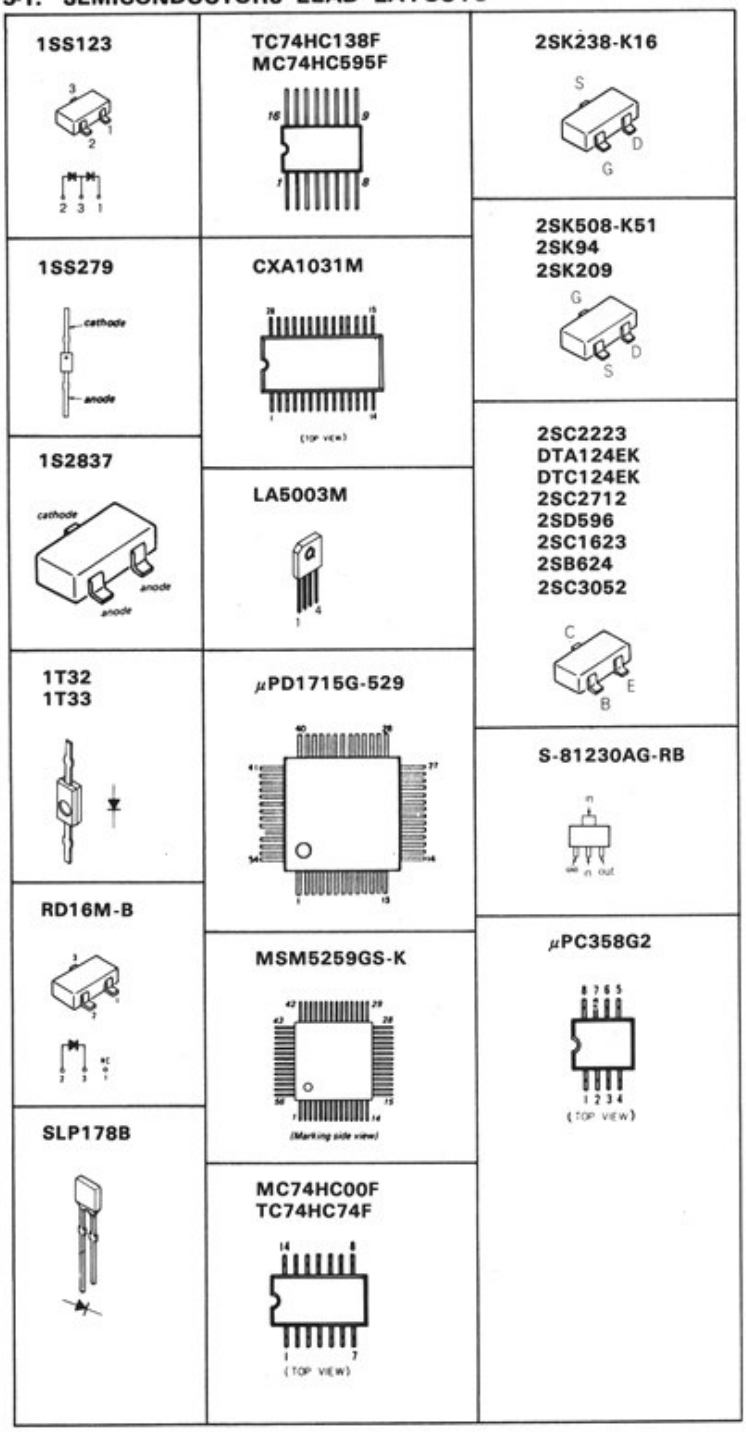

www.shortwaveradio.ch

●SEMICONDUCTOR LOCATION

Ref.No.	Location	Ref.No.	Location
D1	B-21	IC1	C-23
D2	C-22	IC2	C-28
D3	B-22	IC3	G-26
D4	B-18	IC4	E-14
D5	B-18	IC5	G-13
D6	B-17	IC6	H-14
D7	B-17	IC7	D-12
D8	B-16	IC201	E-7
D9	B-16	IC202	G-7
D10	B-15	IC203	G-3
D11	B-15	IC204	F-3
D12	B-14	IC205	F-3
D13	B-14	IC206	D-3
D14	B-13		
D15	B-13		
D16	C-21	Q1	C-20
D17	C-21	Q2	C-17
D18	C-18	Q3	C-15
D19	C-21	Q4	E-16
D20	C-21	Q5	C-19
D21	E-23	Q6	D-18
D22	E-22	Q7	F-18
D23	D-26	Q8	F-19
D24	E-26	Q9	E-19
D25	F-26	Q10	D-22
D26	F-26	Q11	D-22
D28	B-22	Q12	D-25
D29	D-28	Q13	D-27
D30	D-29	Q14	E-27
D31	G-12	Q15	E-13
D32	F-27	Q16	D-16
D33	G-12	Q17	E-24
D34	G-28	Q18	D-13
D35	H-19	Q21	F-13
D36	C-13	Q22	D-28
D37	C-24	Q23	D-29
D38	C-18	Q24	D-12
D40	D-40	Q25	G-14
D41	D-40	Q26	G-14
D42	E-26	Q27	F-15
D201	F-8	Q28	G-13
D202	I-5	Q29	G-28
D203	D-8	Q30	G-13
D204	E-8	Q201	D-6
D205	D-6	Q203	E-6
		Q204	F-5
D206	B-3		
D207	F-4		

- ■ : part mounted on the conductor side.
- ⊢ : indicates side identified with part number.
- ⊗ : Through hole.
- : component-side pattern.

3-2. MOUNTING DIAGRAM (1)

- See page 25 for semiconductor lead layouts.
- See page 45–48 UNTIL SERIAL NO. 7901.

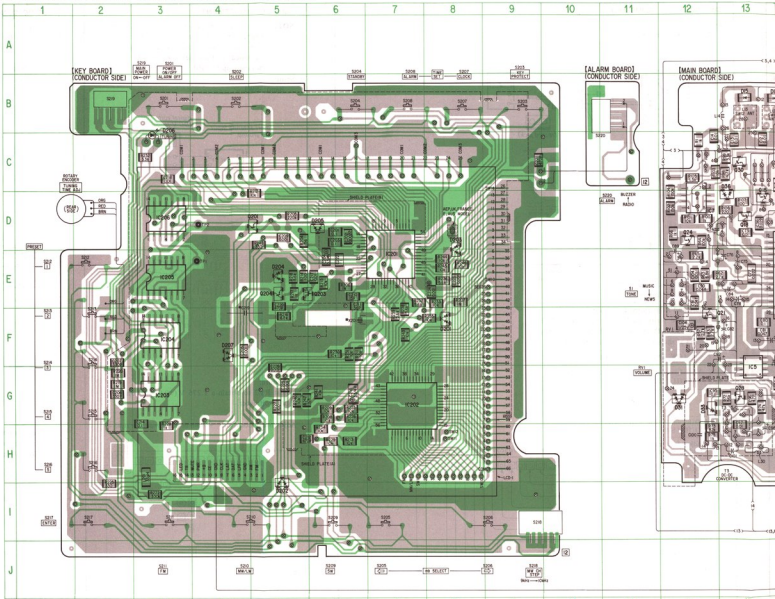

www.shortwaveradio.ch

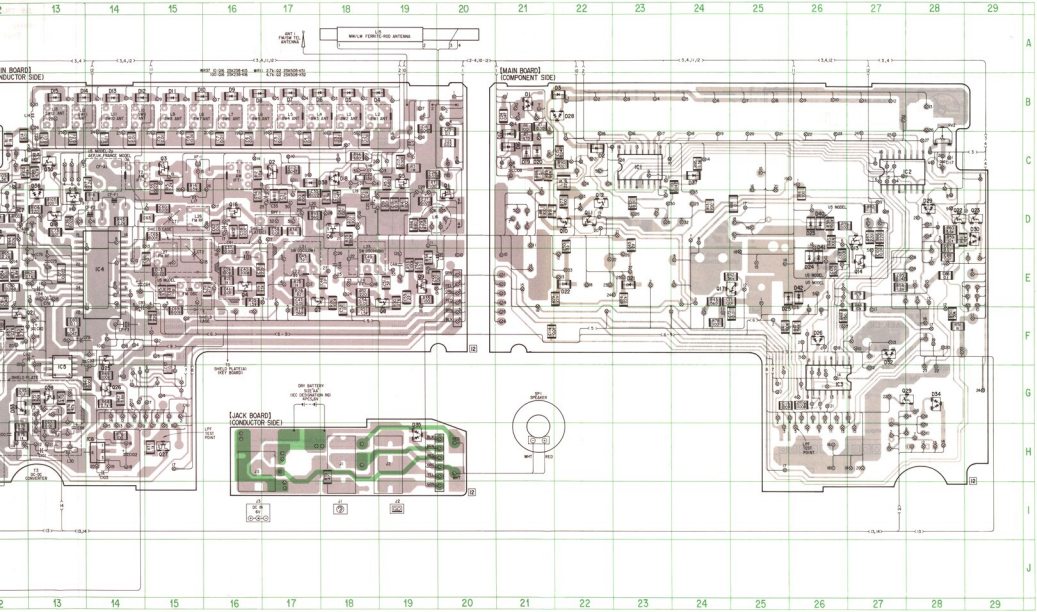

www.shortwaveradio.ch

3-3. SCHEMATIC DIAGRAM (1)

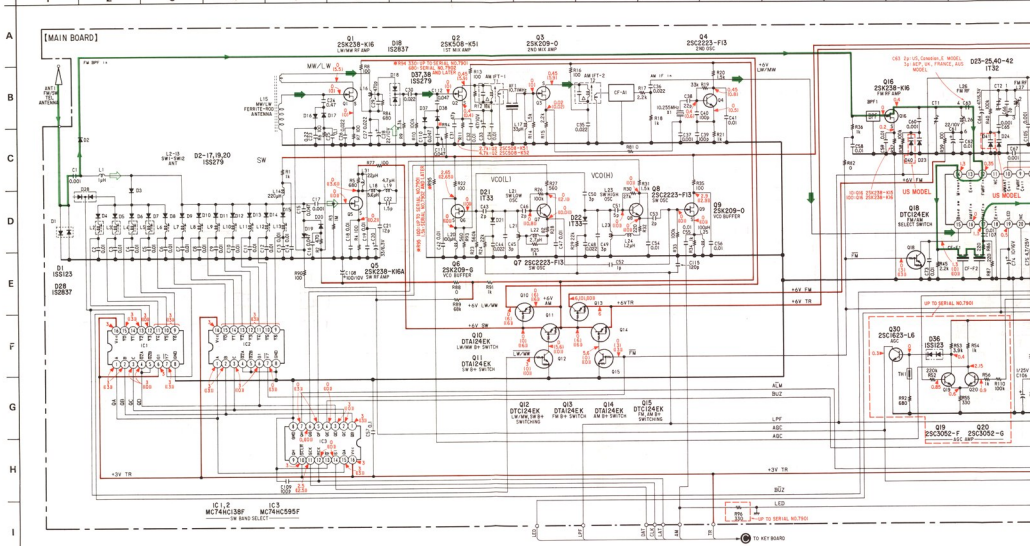

www.shortwaveradio.ch

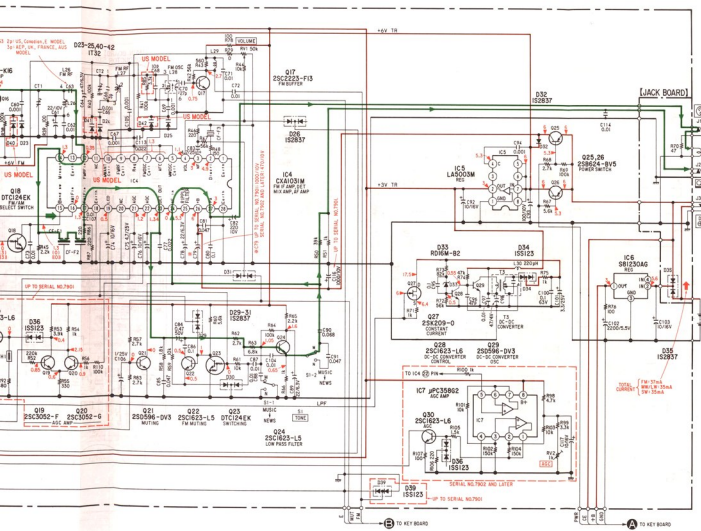

Note:

- All capacitors are in μF unless otherwise noted. pF: μμF
  50 WV or less are not indicated except for electrolytics and tantalums.
- All resistors are in Ω and ¼W or less unless otherwise specified.
  - ▬▶ : FM signal path
  - ▭▶ : MW/LW signal path
  - ▬▶ : SW signal path
- △ : internal component.

• Switch

Ref. No.	Switch	Position
S1	TONE	MUSIC
S201	POWER ON/OFF ALARM OFF	OFF
S202	SLEEP	OFF
S203	KEY PROTECT	OFF
S204	STANDBY	OFF
S205	mb select ☆	OFF
S206	mb select ☆	OFF
S207	TIME SET CLOCK	OFF
S208	TIME SET ALARM	OFF
S209	SW	OFF
S210	MW/LW	OFF
S211	FM	OFF
S212	PRESET 1	OFF
S213	PRESET 2	OFF
S214	PRESET 3	OFF
S215	PRESET 4	OFF
S216	PRESET 5	OFF
S217	ENTER	OFF
S218	MW CH STEP	9kHz
S219	MAIN POWER	OFF
S220	ALARM	RADIO

- ▬▬ : B+ bus.
- Power voltage is 6 V and fed with regulated DC power supply.
  Voltages are dk with respect to ground in detuned mode with VOM (DC 50k Ω/V). Voltage variations may be noted due tolnormal production tolerances.
  no mark: FM mode
  ( ) : MW/LW mode
  (( )) : SW mode
- Waveforms are taken to ground in no signal mode by using oscilloscope.
  Voltage variations may be noted due to normal production tolerances.

IC4 CXA1031M

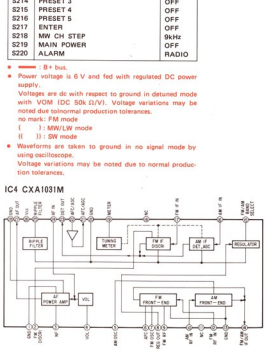

www.shortwaveradio.ch

3-4. MOUNTING DIAGRAM (1)

● See page 25 and 26 for location of semiconductor and notes.

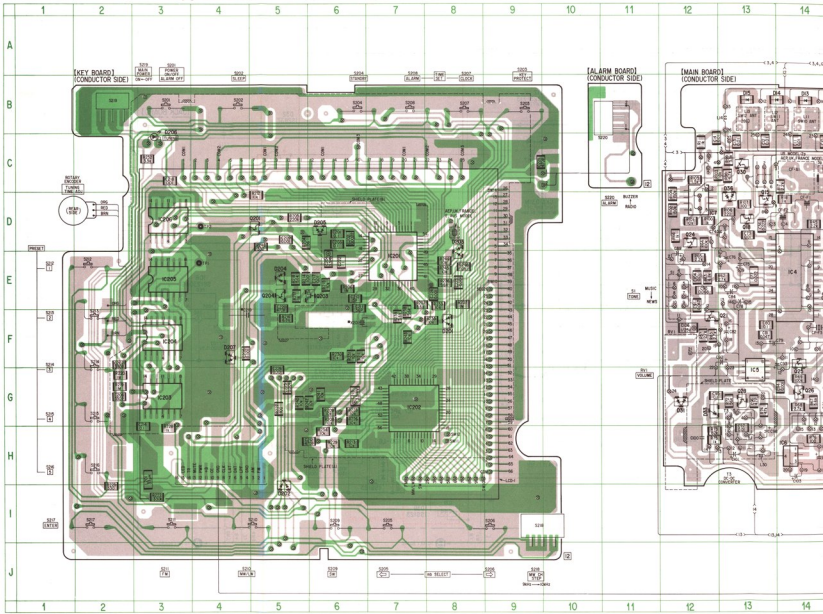

www.shortwaveradio.ch

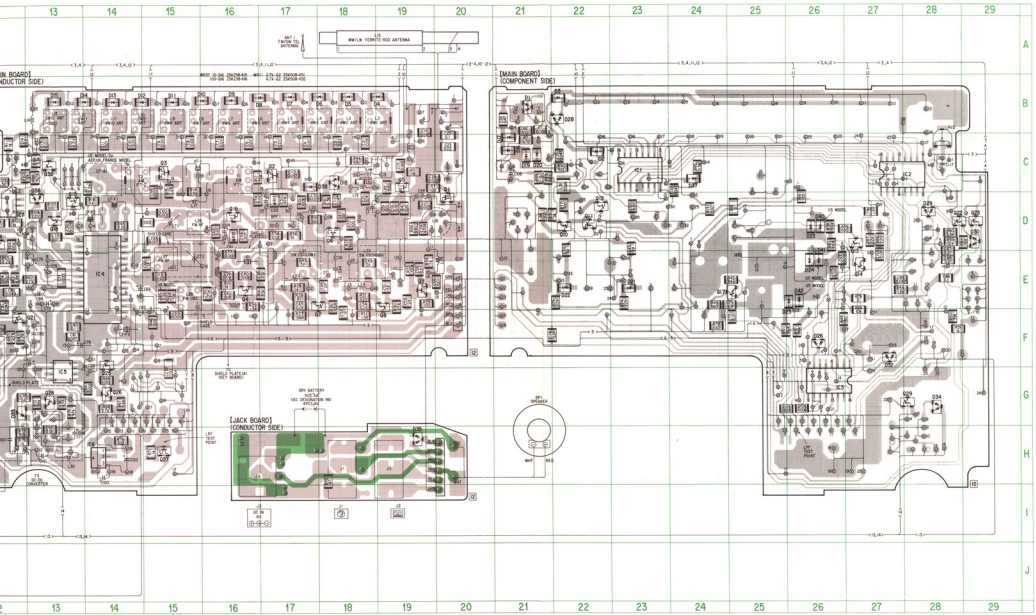

www.shortwaveradio.ch

36. SCHEMATIC DIAGRAM (2)

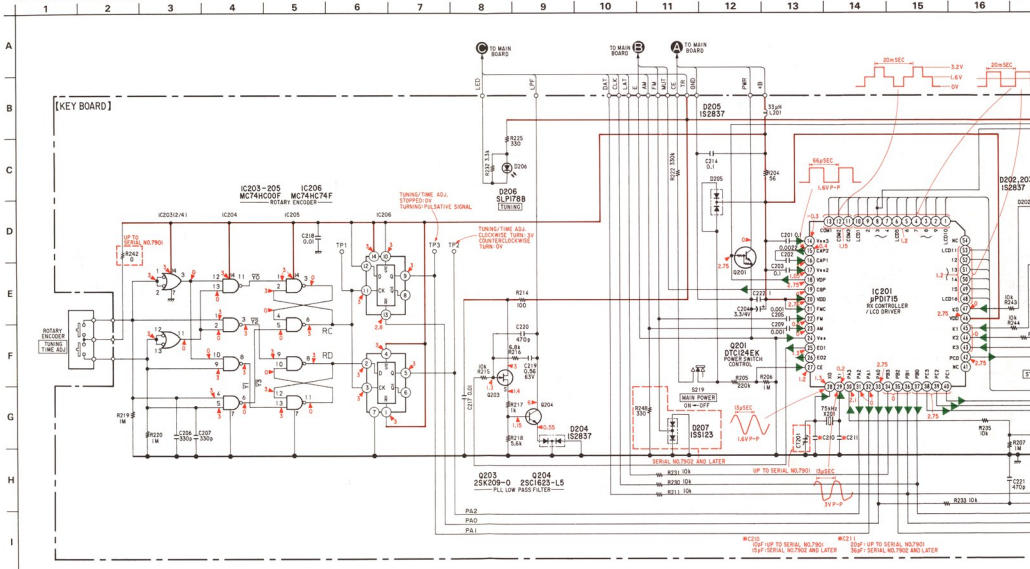

www.shortwaveradio.ch

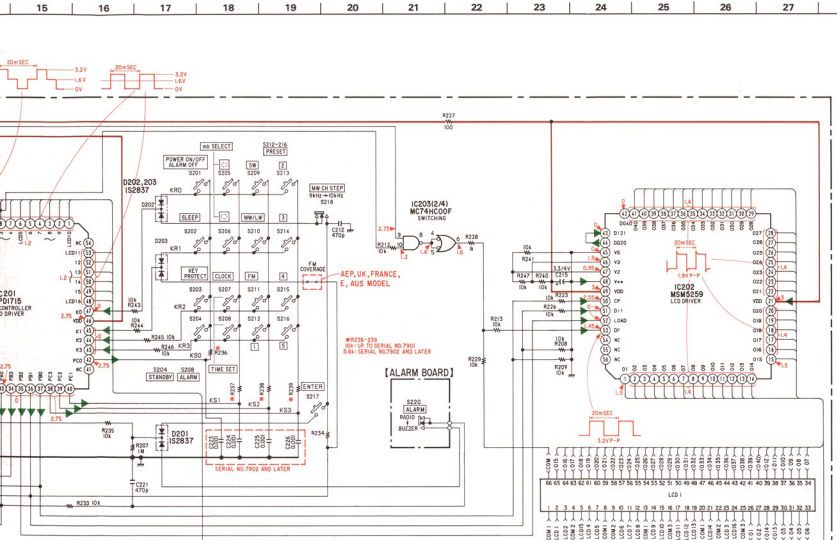

Note:

- All capacitors are in μF unless otherwise noted. pF: μμF 50 WV or less are not indicated except for electrolytics and tantalums.
- All resistors are in Ω and ¼W or less unless otherwise specified.
- △ : internal component.
- Switch

Ref. No.	Switch	Position
S1	TONE	MUSIC
S201	POWER ON/OFF ALARM OFF	OFF
S202	SLEEP	OFF
S203	KEY PROTECT	OFF
S204	STANDBY	OFF
S205	mb select ☆	OFF
S206	mb select ◇	OFF
S207	TIME SET CLOCK	OFF
S208	TIME SET ALARM	OFF
S209	SW	OFF
S210	MW/LW	OFF
S211	FM	OFF
S212	PRESET 1	OFF
S213	PRESET 2	OFF
S214	PRESET 3	OFF
S215	PRESET 4	OFF
S216	PRESET 5	OFF
S217	ENTER	OFF
S218	MW CH STEP	9kHz
S219	MAIN POWER	OFF
S220	ALARM	RADIO

- ━━━ : B+ bus.
- Power voltage is 6 V and fed with regulated DC power supply.
  Voltages are dc with respect to ground in detuned mode with VOM (DC 50k Ω/V). Voltage variations may be noted due tolnormal production tolerances.
  no mark: FM mode
  ( ) : MW/LW mode
  [ ] : SW mode
- Waveforms are taken to ground in no signal mode by using oscilloscope.
  Voltage variations may be noted due to normal production tolerances.

www.shortwaveradio.ch

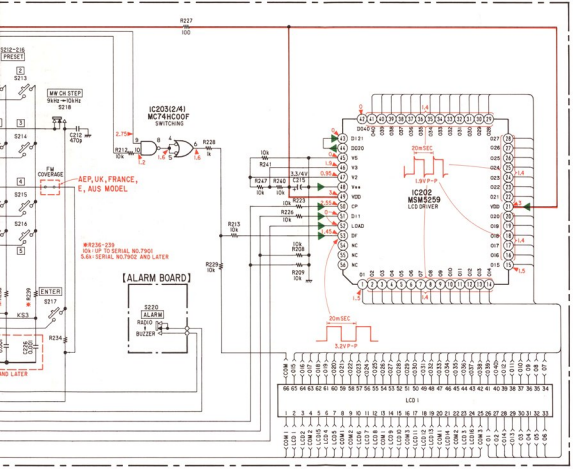

Note:

- All capacitors are in μF unless otherwise noted. pF: μμF 50 WV or less are not indicated except for electrolytics and tantalums.
- All resistors are in Ω and ¼W or less unless otherwise specified.
- △ : Internal component.
- Switch

Ref. No.	Switch	Position
S1	TONE	MUSIC
S201	POWER ON/OFF ALARM OFF	OFF
S202	SLEEP	OFF
S203	KEY PROTECT	OFF
S204	STANDBY	OFF
S205	mb select ◁▷	OFF
S206	mb select ◁	OFF
S207	TIME SET CLOCK	OFF
S208	TIME SET ALARM	OFF
S209	SW	OFF
S210	MW/LW	OFF
S211	FM	OFF
S212	PRESET 1	OFF
S213	PRESET 2	OFF
S214	PRESET 3	OFF
S215	PRESET 4	OFF
S216	PRESET 5	OFF
S217	ENTER	OFF
S218	MW CH STEP	9kHz
S219	MAIN POWER	OFF
S220	ALARM	RADIO

- ▬▬ : B+ bus.
- Power voltage is 6 V and fed with regulated DC power supply.
  Voltages are dc with respect to ground in detuned mode with VOM (DC 50k Ω/V). Voltage variations may be noted due to normal production tolerances.
  no mark: FM mode
  ( ) : MW/LW mode
  [( )] : SW mode
- Waveforms are taken to ground in no signal mode by using oscilloscope.
  Voltage variations may be noted due to normal production tolerances.

IC201 μPD1715G-529

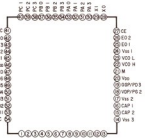

IC201 MSM5259GS-K

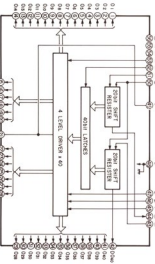

www.shortwaveradio.ch

●SEMICONDUCTOR LOCATION

Ref.No.	Location	Ref.No.	Location
D1	B-21	IC1	C-23
D2	C-22	IC2	C-28
D3	B-22	IC3	G-26
D4	B-18	IC4	E-14
D5	B-18	IC5	G-13
D6	B-17	IC6	H-14
D7	B-17	IC201	E-7
D8	B-16	IC202	G-7
D9	B-16	IC203	G-3
D10	B-15	IC204	F-3
D11	B-15	IC205	E-3
D12	B-14	IC206	D-3
D13	B-14		
D14	B-13		
D15	B-13		
D16	C-21	Q1	C-20
D17	C-18	Q2	C-17
D18	C-18	Q3	E-18
D19	C-21	Q4	E-19
D20	C-21	Q5	C-19
D21	E-23	Q6	F-18
D22	E-22	Q7	F-18
D23	D-26	Q8	F-19
D24	E-26	Q9	E-19
D25	E-26	Q10	D-22
D26	F-26	Q11	D-22
D27	D-12	Q12	D-22
D28	B-22	Q13	D-27
D29	D-26	Q14	E-27
D30	D-29	Q15	D-13
D31	G-12	Q16	D-16
D32	F-27	Q17	E-24
D33	G-12	Q18	D-13
D34	G-26	Q19	C-12
D35	H-19	Q20	C-12
D36	C-13	Q21	F-13
D37	C-24	Q22	D-28
D38	C-18	Q23	D-29
D39	G-15	Q24	D-12
D40	D-26	Q25	G-14
D41	D-26	Q26	G-14
D42	E-26	Q27	H-15
D201	F-8	Q28	G-13
D202	I-5	Q29	G-28
D203	D-8	Q30	C-13
D204	E-5	Q201	D-5
D205	D-5	Q203	E-5
D206	B-3	Q204	E-5

- ■ : part mounted on the conductor side.
- ┼ : indicates side identified with part number.
- ⊗ : Through hole.
- : component-side pattern.

3-6. MOUNTING DIAGRAM (2)

- See page 25 for semiconductor lead layouts.
- See pages 27-30 and 35-38 for SERIAL NO. 7902 AND LATER.

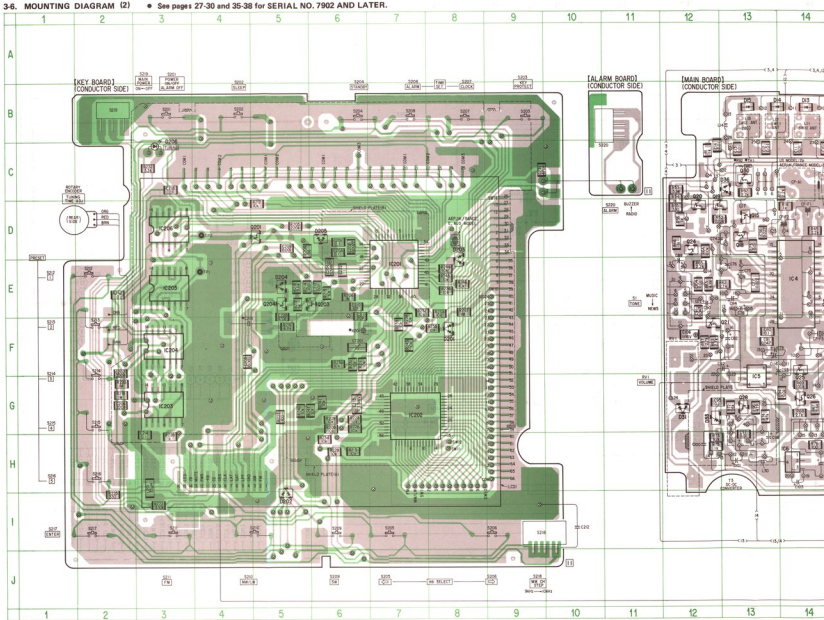

www.shortwaveradio.ch

ICF-7600DA/7700

UNTIL SERIAL NO. 7901

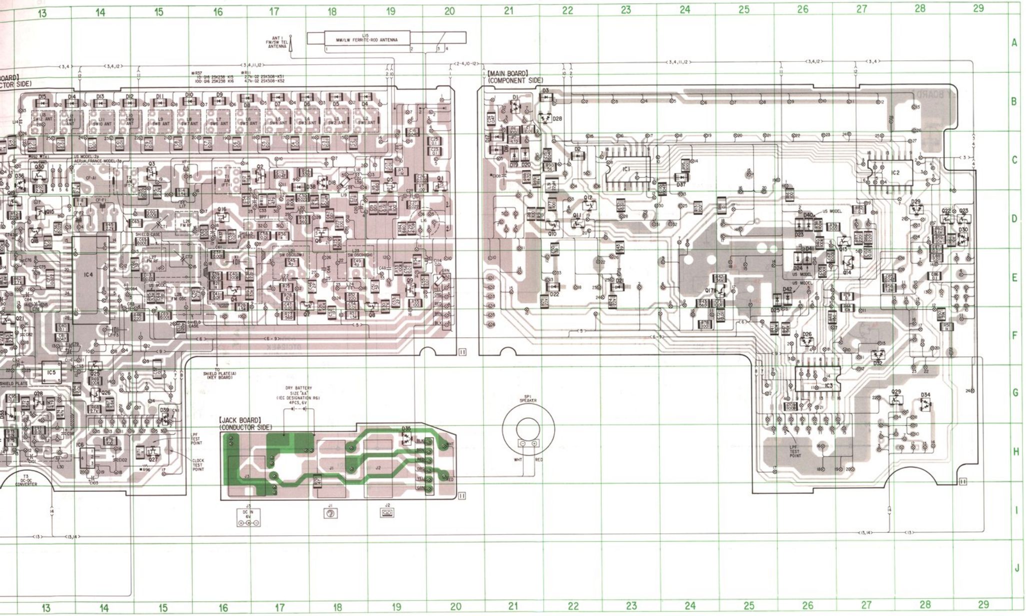

www.shortwaveradio.ch

SECTION 4
EXPLODED VIEWS AND PARTS LIST

NOTE:
- The mechanical parts with no reference number in the exploded views are not supplied.
- Items marked " * " are not stocked since they are seldom required for routine service. Some delay should be anticipated when ordering these items.
- The construction parts of an assembled part are indicated with a collation number in the remark column.
- Color Indication of Appearance Parts
  Example: (RED) ..... KNOB, BALANCE (WHITE)
  ↑ Cabinet's Color ↑ Parts' Color

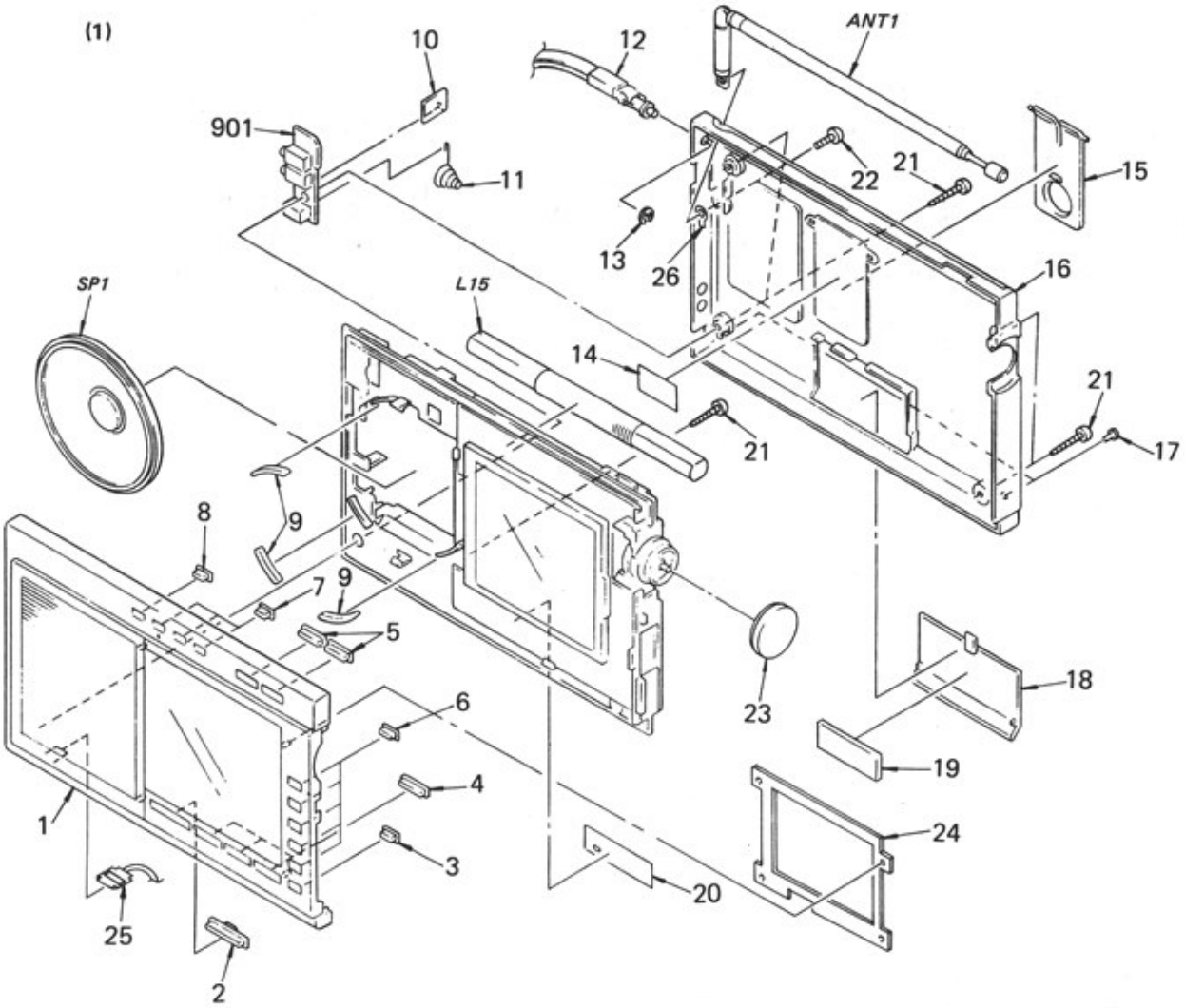

No.	Part No.	Description	Remarks
1	A-3640-970-A	(AEP,UK,FRANCE,E,AUS)..CABINET (FRONT) ASSY	
	A-3640-971-A	(US,Canadian,E).....CABINET (FRONT) ASSY	
2	3-898-327-01	BUTTON, SELECT	
3	3-898-336-11	BUTTON, SET	
4	3-898-335-01	BUTTON, BAND	
5	3-898-338-01	BUTTON, POWER	
6	3-898-337-01	BUTTON, MEMORY	
7	3-898-336-01	BUTTON, SET	
8	3-898-336-21	BUTTON, SET	
9	3-881-931-00	CUSHION, SPEAKER	
10	3-898-322-01	TERMINAL, BATTERY	
11	3-889-819-00	SPRING	
12	3-891-813-11	STRAP, HAND	
13	7-624-104-04	STOP RING 2.0, TYPE -E	
14	*3-898-323-01	COVER, STAND	

No.	Part No.	Description	Remarks
15	3-898-324-01	STAND	
16	3-898-317-11	(US,Canadian,E)....LID, REAR, CABINET	
	3-898-317-21	(AEP,UK,E).....LID, REAR, CABINET	
17	3-880-917-00	STOPPER	
18	3-891-817-21	LID, BATTERY CASE	
19	3-485-341-11	CUSHION	
20	*3-898-301-01	LABEL, (MW CH) STEP	
21	7-685-151-19	SCREW +P 3X20 TYPE2 NON-SLIT	
22	7-682-146-09	SCREW +P 3X5	
23	X-3898-307-1	KNOB ASSY, TINING	
24	X-3898-309-1	PLATE ASSY, BACK	
25	3-898-358-01	TERMINAL, GROUND	
26	3-898-362-01	LUG, PLATE	
901	*1-622-119-11	PC BOARD, JACK	
ANT1	1-501-376-11	ANTENNA, TELESCOPIC	
L15	1-402-275-11	ANTENNA, FERRITE-ROD (LW/MW)	
SP1	1-502-631-00	SPEAKER	

www.shortwaveradio.ch

(2)

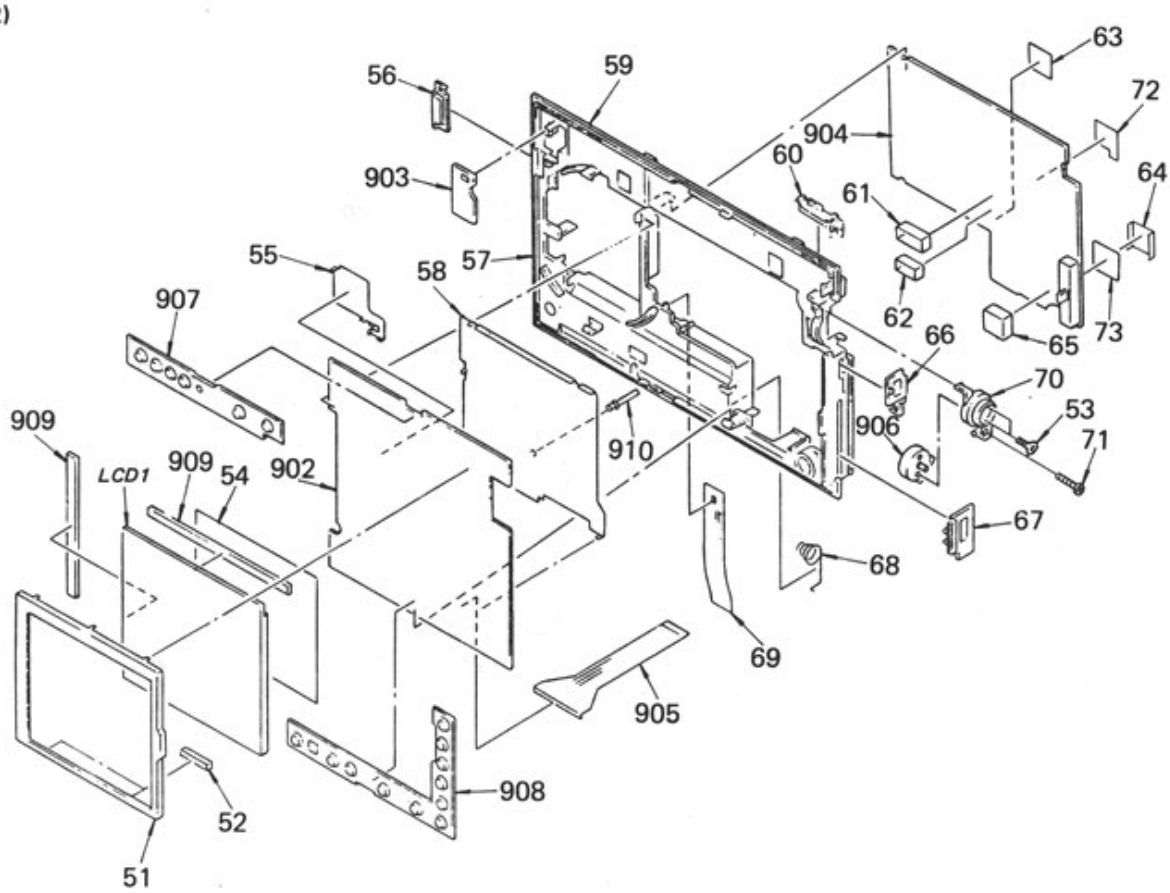

No.	Part No.	Description	Remarks
51	*3-898-333-01	HOLDER, LCD	
52	3-898-349-01	CUSHION (A)	
53	3-892-318-00	SCREW, SMALL	
54	3-898-350-01	CUSHION (B)	
55	*3-898-311-01	PLATE (B), SHIELD	
56	3-898-318-01	(US,Canadian,AEP,UK,AUS,E2,1E3)..KNOB,SLIDE	
	3-898-318-21	(2E3).....KNOB,SLIDE	
58	*3-898-310-01	PLATE (A), SHIELD	
59	*3-898-316-01	CHASSIS	
60	3-898-318-11	KNOB, SLIDE	
61	*3-898-342-01	CASE (FM RF), SHIELD	
62	*3-898-343-01	CASE (FM OSC), SHIELD	
63	*X-3898-305-1	PLATE ASSY, SHIELD, D/D P	
64	X-3898-304-1	PLATE (A) ASSY, SHIELD	
65	*3-898-345-01	CASE, SHIELD, D/D M	
66	3-898-319-01	KNOB, TONE	
67	3-898-320-01	KNOB, VOLUME	
68	3-883-423-00	SPRING	
69	*3-898-341-01	CLOTH, DRAWER, BATTERY	

No.	Part No.	Description	Remarks
70	*3-898-321-01	HOLDER	
71	7-685-534-19	SCREW +B 2.6X8	
72	X-3898-321-2	PLATE ASSY, SHIELD	
73	*3-898-346-01	INSULATOR, D/D P	
902	A-3675-005-A	(US,Canadian,E).....MOUNTED PCB, KEY	
	A-3675-006-A	(AEP,UK,FRANCE,AUS)...MOUNTED PCB, KEY	
903	*1-622-121-11	PC BOARD, ALARM	
904	A-3660-679-A	(US,Canadian,E).....MOUNTED PCB, MAIN	
	A-3660-685-A	(AEP,UK,FRANCE,AUS)...MOUNTED PCB, MAIN	
905	1-622-135-11	PC BOARD, FLEXIBLE	
906	1-464-788-11	ENCODER, ROTARY	
907	1-571-057-11	SWITCH, RUBBER KEY (S205,206,209-217)	
908	1-571-058-11	SWITCH, RUBBER KEY (S201-204,207,108)	
909	1-535-655-11	CONDUCTOR (CONNECTION)	
910	1-535-666-11	TERMINAL	
LCD1	1-807-777-11	(US,Canadian,E) ...DISPLAY PANEL, LIQUID CRYSTAL	
LCD1	1-807-778-11	(AEP,UK,FRANCE,AUS) ...DISPLAY PANEL, LIQUID CRYSTAL	

www.shortwaveradio.ch

SECTION 5
ELECTRICAL PARTS LIST

NOTE:
- Items marked " * " are not stocked since they are seldom required for routine service. Some delay should be anticipated when ordering these items.
- If there are two or more same circuitsin a set such as a stereophonic machine, only typical circuit parts may be indicated and capacitors and resistors in other same circuits may be omitted.

CAPACITORS:
MF:μF, PF:μμF.

RESISTORS
- All resistors are in ohms.
- F : nonflammable

COILS
- MMH : mH, UH : μH

SEMICONDUCTORS
In each case, U : μ, for example:
UA...: μA..., UPA...: μPA..., UPC...: μPC, UPD...: μPD...

ELECTRICAL PARTS

Ref.No.	Part No.	Description		
901	*1-622-119-11	PC BOARD, JACK		
902	A-3675-005-A	(US,Canadian,E).....MOUNTED PCB, KEY		
	A-3675-006-A	(AEP,UK,FRANCE,AUS)..MOUNTED PCB, KEY		
903	*1-622-121-11	PC BOARD, ALARM		
904	A-3660-679-A	(US,Canadian,E).....MOUNTED PCB, MAIN		
	A-3660-685-A	(AEP,UK,FRANCE,AUS)..MOUNTED PCB, MAIN		
905	1-622-135-11	PC BOARD, FLEXIBLE		
906	1-464-788-11	ENCODER, ROTARY		
907	1-571-057-11	SWITCH, RUBBER KEY (S205,206,209-217)		
908	1-571-058-11	SWITCH, RUBBER KEY (S201-204,207,108)		
909	1-535-655-11	CONDUCTOR (CONNECTION)		
910	1-535-666-11	TERMINAL		
ANT1	1-501-376-11	ANTENNA, TELESCOPIC		
BPF1	1-235-253-00	(AEP,UK,FRANCE,AUS)..FILTER, BAND PASS		
BPF1	1-235-254-00	(US,Canadian,E).....FILTER, BAND PASS		
C1	1-163-141-00	CERAMIC CHIP 0.001MF	10%	50V
C2	1-163-021-00	CERAMIC CHIP 0.01MF		50V
C3	1-163-021-00	CERAMIC CHIP 0.01MF		50V
C4	1-163-021-00	CERAMIC CHIP 0.01MF		50V
C5	1-163-021-00	CERAMIC CHIP 0.01MF		50V
C6	1-163-021-00	CERAMIC CHIP 0.01MF		50V
C7	1-163-021-00	CERAMIC CHIP 0.01MF		50V
C8	1-163-021-00	CERAMIC CHIP 0.01MF		50V
C9	1-163-021-00	CERAMIC CHIP 0.01MF		50V
C10	1-163-021-00	CERAMIC CHIP 0.01MF		50V
C11	1-163-021-00	CERAMIC CHIP 0.01MF		50V
C12	1-163-021-00	CERAMIC CHIP 0.01MF		50V
C13	1-163-021-00	CERAMIC CHIP 0.01MF		50V
C14	1-163-021-00	CERAMIC CHIP 0.01MF	10%	50V
C15	1-163-035-00	CERAMIC CHIP 0.047MF	10%	25V
C16	1-163-035-00	CERAMIC CHIP 0.047MF	10%	25V
C17	1-163-141-00	CERAMIC CHIP 0.001MF	10%	50V
C18	1-163-021-00	CERAMIC CHIP 0.01MF	10%	50V
C19	1-163-021-00	CERAMIC CHIP 0.01MF	10%	50V
C20	1-123-646-00	ELECT 33MF	20%	6.3V
C21	1-163-095-00	CERAMIC CHIP 12PF	5%	50V
C22	1-163-084-00	CERAMIC CHIP 1.5PF	0.25PF	50V
C23	1-163-081-00	CERAMIC CHIP 0.22MF	10%	25V
C24	1-162-637-11	CERAMIC CHIP 0.47MF		16V
C25	1-163-077-00	CERAMIC CHIP 0.1MF	10%	25V
C26	1-163-033-00	CERAMIC CHIP 0.022MF	10%	25V
C27	1-163-033-00	CERAMIC CHIP 0.022MF	10%	25V
C28	1-123-644-61	ELECT 22MF	20%	10V

ELECTRICAL PARTS

Ref.No.	Part No.	Description		
C29	1-163-133-00	CERAMIC CHIP 470PF	10%	50V
C30	1-163-033-00	CERAMIC CHIP 0.022MF	10%	25V
C31	1-163-109-00	CERAMIC CHIP 47PF	5%	50V
C32	1-163-021-00	CERAMIC CHIP 0.01MF	10%	50V
C33	1-123-822-00	ELECT 47MF	20%	10V
C34	1-163-021-00	CERAMIC CHIP 0.01MF	10%	50V
C35	1-163-033-00	CERAMIC CHIP 0.022MF	10%	25V
C36	1-163-033-00	CERAMIC CHIP 0.022MF	10%	25V
C37	1-163-141-00	CERAMIC CHIP 0.001MF	10%	50V
C38	1-163-101-00	CERAMIC CHIP 22PF	5%	50V
C39	1-163-117-00	CERAMIC CHIP 100PF	5%	50V
C40	1-163-117-00	CERAMIC CHIP 100PF	5%	50V
C41	1-163-021-00	CERAMIC CHIP 0.01MF	10%	50V
C42	1-163-021-00	CERAMIC CHIP 0.01MF	10%	50V
C43	1-163-085-00	CERAMIC CHIP 2PF	0.25PF	50V
C44	1-161-055-00	CERAMIC 0.022MF	20%	25V
C45	1-163-086-00	CERAMIC CHIP 3PF	0.25PF	50V
C46	1-163-085-00	CERAMIC CHIP 2PF	0.25PF	50V
C47	1-163-021-00	CERAMIC CHIP 0.01MF	10%	50V
C48	1-161-055-00	CERAMIC 0.022MF	20%	25V
C49	1-163-086-00	CERAMIC CHIP 3PF	0.25PF	50V
C50	1-163-086-00	CERAMIC CHIP 3PF	0.25PF	50V
C51	1-163-088-00	CERAMIC CHIP 5PF	0.25PF	50V
C52	1-163-083-00	CERAMIC CHIP 1PF	0.25PF	50V
C53	1-163-085-00	CERAMIC CHIP 2PF	0.25PF	50V
C54	1-163-021-00	CERAMIC CHIP 0.01MF	10%	50V
C55	1-163-021-00	CERAMIC CHIP 0.01MF	10%	50V
C56	1-163-021-00	CERAMIC CHIP 0.01MF	10%	50V
C57	1-163-077-00	CERAMIC CHIP 0.1MF	10%	25V
C58	1-163-021-00	CERAMIC CHIP 0.01MF	10%	50V
C59	1-163-021-00	CERAMIC CHIP 0.01MF	10%	50V
C60	1-163-141-00	CERAMIC CHIP 0.001MF		50V
C61	1-123-644-61	ELECT 22MF	20%	10V
C62	1-163-021-00	CERAMIC CHIP 0.01MF	10%	50V
C63	1-163-085-00	(US,Canadian,E) ....CERAMIC CHIP 2PF	0.25PF	50V
C63	1-163-086-00	(AEP,UK,FRANCE,AUS) ...CERAMIC CHIP 3PF	0.25PF	50V
C64	1-124-224-00	ELECT 47MF	20%	6.3V
C65	1-163-141-00	CERAMIC CHIP 0.001MF		50V
C66	1-163-086-00	CERAMIC CHIP 3PF	0.25PF	50V
C67	1-163-141-00	CERAMIC CHIP 0.001MF	10%	50V
C68	1-163-093-00	CERAMIC CHIP 10PF	5%	50V
C69	1-163-141-00	CERAMIC CHIP 0.001MF		50V
C70	1-163-103-00	CERAMIC CHIP 27PF	5%	50V
C71	1-163-021-00	CERAMIC CHIP 0.01MF	10%	50V
C72	1-163-021-00	CERAMIC CHIP 0.01MF		50V

www.shortwaveradio.ch

ELECTRICAL PARTS

Ref.No.	Part No.	Description			
C73	1-163-021-00	CERAMIC CHIP	0.01MF	10%	50V
C74	1-123-617-00	ELECT	10MF	20%	16V
C75	1-124-245-00	ELECT	4.7MF	20%	25V
C76	1-123-617-00	ELECT	10MF	20%	16V
C77	1-163-063-00	CERAMIC CHIP	0.022MF	10%	50V
C78	1-124-638-11	ELECT	22MF	20%	6.3V
C79	1-123-311-00	(UP TO SERIAL No.7901) ...ELECT	1000MF	20%	10V
C79	1-124-142-00	(SERIAL No.7902 AND LATER) ...ELECT	470MF	20%	10V
C80	1-163-077-00	CERAMIC CHIP	0.1MF	10%	25V
C81	1-163-075-00	CERAMIC CHIP	0.047MF	10%	25V
C82	1-124-140-00	ELECT	220MF	20%	10V
C83	1-124-245-00	ELECT	4.7MF	20%	25V
C84	1-124-465-00	ELECT	0.47MF	20%	50V
C85	1-163-035-00	CERAMIC CHIP	0.047MF	10%	25V
C86	1-163-077-00	CERAMIC CHIP	0.1MF	10%	25V
C87	1-163-021-00	CERAMIC CHIP	0.01MF	10%	50V
C88	1-163-021-00	CERAMIC CHIP	0.01MF	10%	50V
C89	1-124-638-11	ELECT	22MF	20%	6.3V
C90	1-163-036-00	ELECT	0.068MF	20%	50V
C91	1-163-035-00	CERAMIC CHIP	0.047MF	10%	25V
C92	1-123-617-00	ELECT	10MF	20%	16V
C93	1-124-139-00	ELECT	100MF	20%	10V
C94	1-163-141-00	CERAMIC CHIP	0.001MF	10%	50V
C95	1-163-038-00	CERAMIC CHIP	0.1MF		25V
C96	1-163-109-00	CERAMIC CHIP	47PF	5%	50V
C97	1-163-021-00	CERAMIC CHIP	0.01MF	10%	50V
C98	1-124-432-00	ELECT	47MF	20%	4V
C100	1-130-768-00	FILM	0.1MF	10%	63V
C101	1-124-436-00	ELECT	3.3MF	20%	25V
C102	1-126-166-21	ELECT	2200MF		5.5V
C103	1-123-617-00	ELECT	10MF	20%	16V
C104	1-163-021-00	CERAMIC CHIP	0.01MF	10%	50V
C105	1-163-141-00	CERAMIC CHIP	0.001MF	10%	50V
C106	1-135-076-00	TANTAL. CHIP	1MF	20%	25V
C107	1-163-021-00	CERAMIC CHIP	0.01MF	10%	50V
C108	1-124-139-00	ELECT	100MF	20%	10V
C109	1-163-117-00	CERAMIC CHIP	100PF	5%	50V
C110	1-163-035-00	CERAMIC CHIP	0.047MF	10%	25V
C111	1-163-035-00	CERAMIC CHIP	0.047MF	10%	25V
C112	1-163-035-00	CERAMIC CHIP	0.047MF	10%	25V
C113	1-163-033-00	CERAMIC CHIP	0.022MF	10%	25V
C114	1-163-021-00	CERAMIC CHIP	0.01MF	10%	50V
C115	1-163-119-00	CERAMIC CHIP	120PF	5%	50V
C116	1-123-311-00	(UP TO SERIAL No.7901) ...ELECT	1000MF		10V
C117	1-123-617-00	(SERIAL No.7902 AND LATER) ...ELECT	10MF	20%	16V
C201	1-163-038-00	CERAMIC CHIP	0.1MF		25V
C202	1-163-013-00	CERAMIC CHIP	0.0022MF	10%	50V
C203	1-163-038-00	CERAMIC CHIP	0.1MF		25V
C204	1-135-103-00	TANTAL. CHIP	3.3MF	20%	4V
C205	1-163-141-00	CERAMIC CHIP	0.001MF		50V
C206	1-163-129-00	CERAMIC CHIP	330PF	10%	50V
C207	1-163-129-00	CERAMIC CHIP	330PF	10%	50V
C209	1-163-141-00	CERAMIC CHIP	0.001MF		50V
C210	1-163-093-00	(UP TO SERIAL No.7901) ...CERAMIC CHIP	10PF	5%	50V
C210	1-163-097-00	(SERIAL No.7902 AND LATER) ...CERAMIC CHIP	15PF		

ELECTRICAL PARTS

Ref.No.	Part No.	Description			
C211	1-163-100-00	(UP TO SERIAL No.7901) ...CERAMIC CHIP	20PF	5%	50V
C211	1-163-106-00	(SERIAL No.7902 AND LATER) ...CERAMIC CHIP	36PF		
C212	1-102-114-00	(UP TO SERIAL No.7901) ...CERAMIC	470PF	10%	50V
C212	1-163-133-00	(SERIAL No.7902 AND LATER) ...CERAMIC CHIP	470PF	10%	50V
C214	1-163-077-00	CERAMIC CHIP	0.1MF	10%	25V
C215	1-135-103-00	TANTAL. CHIP	3.3MF	20%	4V
C217	1-163-021-00	CERAMIC CHIP	0.01MF		50V
C218	1-163-021-00	CERAMIC CHIP	0.01MF		50V
C219	1-130-831-21	FILM	0.56MF	10%	63V
C220	1-163-133-00	CERAMIC CHIP	470PF	10%	50V
C221	1-163-133-00	CERAMIC CHIP	470PF	10%	50V
C222	1-162-611-00	(US,Canadian,E) ....CERAMIC CHIP	1MF		25V
C222	1-162-638-11	(AEP,UK,FRANCE,AUS) ...CERAMIC CHIP	1MF		16V
C223	1-163-141-00	(SERIAL No.7902 AND LATER) ...CERAMIC CHIP	0.001MF	10%	50V
C224	1-163-141-00	(SERIAL No.7902 AND LATER) ...CERAMIC CHIP	0.001MF	10%	50V
C225	1-163-141-00	(SERIAL No.7902 AND LATER) ...CERAMIC CHIP	0.001MF	10%	50V
C226	1-163-141-00	(SERIAL No.7902 AND LATER) ...CERAMIC CHIP	0.001MF	10%	50V
CF-A1	1-527-982-00	FILTER, CERAMIC			
CF-F1	1-567-051-61	FILTER, CERAMIC			
CF-F2	1-567-051-61	FILTER, CERAMIC			
CF-F3	1-567-051-61	FILTER, CERAMIC			
CNI	*1-562-990-11	SOCKET, CONNECTOR 14P			
CT1	1-141-229-00	CAP, TRIMMER			
CT2					
CT201	1-141-311-11	(UP TO SERIAL No.7901) ...CAP, VAR, TRIMMER (CHIP)			
D1	8-719-101-23	DIODE 1SS123			
D2	8-719-123-79	DIODE 1SS279			
D3	8-719-123-79	DIODE 1SS279			
D4	8-719-123-79	DIODE 1SS279			
D5	8-719-123-79	DIODE 1SS279			
D6	8-719-123-79	DIODE 1SS279			
D7	8-719-123-79	DIODE 1SS279			
D8	8-719-123-79	DIODE 1SS279			
D9	8-719-123-79	DIODE 1SS279			
D10	8-719-123-79	DIODE 1SS279			
D11	8-719-123-79	DIODE 1SS279			
D12	8-719-123-79	DIODE 1SS279			
D13	8-719-123-79	DIODE 1SS279			
D14	8-719-123-79	DIODE 1SS279			
D15	8-719-123-79	DIODE 1SS279			
D16	8-719-123-79	DIODE 1SS279			
D17	8-719-123-79	DIODE 1SS279			
D18	8-719-104-26	DIODE 1S2837			
D19	8-719-100-05	DIODE 1SS279			
D20	8-719-123-79	DIODE 1SS279			
D21	8-719-300-00	DIODE 1T33			
D22	8-719-300-00	DIODE 1T33			
D23	8-713-220-00	DIODE 1T32-2			
D24	8-713-220-00	DIODE 1T32-2			

www.shortwaveradio.ch

ELECTRICAL PARTS

Ref.No.	Part No.	Description
D25	8-713-220-00	DIODE 1T32-2
D26	8-719-100-05	DIODE 1S2837
D28	8-719-100-05	DIODE 1S2837
D29	8-719-100-05	DIODE 1S2837
D30	8-719-100-05	DIODE 1S2837
D31	8-719-100-05	DIODE 1S2837
D32	8-719-100-05	DIODE 1S2837
D33	8-719-106-98	DIODE RD16M-B
D34	8-719-101-23	DIODE 1SS123
D35	8-719-100-05	DIODE 1S2837
D36	8-719-123-79	DIODE 1SS123
D37	8-719-123-79	DIODE 1SS279
D38	8-719-123-79	DIODE 1SS279
D39	8-719-123-79	(UP TO SERIAL No.7901)...DIODE 1SS279
D40	8-713-220-00	(US)...DIODE 1T32-2
D41	8-713-220-00	(US)...DIODE 1T32-2
D42	8-713-220-00	(US)...DIODE 1T32-2
D201	8-719-100-05	DIODE 1S2837
D202	8-719-100-05	DIODE 1S2837
D203	8-719-100-05	DIODE 1S2837
D204	8-719-100-05	DIODE 1S2837
D205	8-719-100-05	DIODE 1S2837
D206	8-719-912-43	DIODE SLP178B
D207	8-719-101-23	(SERIAL No.7902 AND LATER)..DIODE 1SS123
IC1	8-759-205-09	IC TC74HC138F
IC2	8-759-205-09	IC TC74HC138F
IC3	8-759-012-60	IC MC74HC595F
IC4	8-752-030-47	IC CXA1031M
IC5	8-759-801-15	IC LA5003M
IC6	8-759-939-41	IC S-81230AG-RB
IC7	8-759-100-94	(SERIAL No.7902 AND LATER)..IC UPC358G2
IC201	8-759-112-16	IC UPD1715G-529
IC202	8-759-932-06	IC MSM5259GS-K
IC203	8-759-204-94	IC MC74HC00F
IC204	8-759-204-94	IC MC74HC00F
IC205	8-759-204-94	IC MC74HC00F
IC206	8-759-205-06	IC MC74HC74F
J1	1-507-562-00	JACK (EARPHONE)
J2	1-507-562-00	JACK (RECORD)
J3	1-507-985-11	JACK, OUTSIDE POWER (DC IN 6V)
L1	1-410-316-11	MICRO INDUCTOR 1UH
L2	1-402-274-11	COIL (ANT)
L3	1-402-274-11	COIL (ANT)
L4	1-402-273-11	COIL (ANT)
L5	1-402-273-11	COIL (ANT)
L6	1-459-728-11	COIL (WITH CORE)
L7	1-459-728-11	COIL (WITH CORE)
L8	1-459-729-11	COIL (WITH CORE)
L9	1-459-729-11	COIL (WITH CORE)
L10	1-459-730-11	COIL (WITH CORE)
L11	1-459-730-11	COIL (WITH CORE)
L12	1-459-731-11	COIL (WITH CORE)
L13	1-459-731-11	COIL (WITH CORE)
L14	1-410-336-11	MICRO INDUCTOR 220UH
L15	1-402-275-11	ANTENNA, FERRITE-ROD (LW/MW)
L16	1-426-313-11	TRANSFORMER, HIGH FREQUENCY
L17	1-410-331-11	MICRO INDUCTOR 33UH
L18	1-410-325-11	MICRO INDUCTOR 5.6UH
L19	1-410-324-11	MICRO INDUCTOR 4.7UH

ELECTRICAL PARTS

Ref.No.	Part No.	Description
L20	1-410-334-11	MICRO INDUCTOR 100UH
L21	1-406-234-11	COIL (OSC)
L22	1-410-321-11	MICRO INDUCTOR 2.7UH
L23	1-406-235-11	COIL (OSC)
L24	1-410-498-11	MICRO INDUCTOR 1.2UH
L25	1-410-334-11	MICRO INDUCTOR 100UH
L26	1-459-732-00	(US,Canadian,E).....COIL (WITH CORE)
L26	1-459-741-11	(AEP,UK,FRANCE,AUS)...COIL (WITH CORE)
L27	1-459-733-11	(US,Canadian,E).....COIL (WITH CORE)
L27	1-459-740-11	(AEP,UK,FRANCE,AUS)...COIL (WITH CORE)
L28	1-459-734-11	(US,Canadian,E).....COIL (WITH CORE)
L28	1-459-742-11	(AEP,UK,FRANCE,AUS)...COIL (WITH CORE)
L29	*1-422-277-11	COIL, AIR-CORE
L30	1-410-336-11	MICRO INDUCTOR 220UH
L31	1-410-208-41	INDUCTOR CHIP 22UH
L201	1-410-210-21	INDUCTOR CHIP 33UH
LCD1	1-807-777-11	(US,Canadian,E) ...DISPLAY PANEL, LIQUID CRYSTAL
LCD1	1-807-778-11	(AEP,UK,FRANCE,AUS) ...DISPLAY PANEL, LIQUID CRYSTAL
LCD1	1-808-095-11	(AEP(ITALY)) ...DISPLAY PANEL,LIQUID CRYSTAL
Q1	8-729-123-86	TRANSISTOR 2SK238-K16
Q2	8-729-116-64	TRANSISTOR 2SK508-K51
Q3	8-729-109-42	TRANSISTOR 2SK94-X2
Q4	8-729-102-06	TRANSISTOR 2SC2223
Q5	8-729-123-86	TRANSISTOR 2SK238-K16A
Q6	8-729-109-42	TRANSISTOR 2SK94-X2
Q7	8-729-102-06	TRANSISTOR 2SC2223
Q8	8-729-102-06	TRANSISTOR 2SC2223
Q9	8-729-109-42	TRANSISTOR 2SK94-X2
Q10	8-729-901-05	TRANSISTOR DTA124EK
Q11	8-729-901-05	TRANSISTOR DTA124EK
Q12	8-729-901-00	TRANSISTOR DTC124EK
Q13	8-729-901-05	TRANSISTOR DTA124EK
Q14	8-729-901-05	TRANSISTOR DTA124EK
Q15	8-729-901-00	TRANSISTOR DTC124EK
Q16	8-729-123-86	TRANSISTOR 2SK238-K16
Q17	8-729-102-06	TRANSISTOR 2SC2223
Q18	8-729-901-00	TRANSISTOR DTC124EK
Q19	8-729-271-23	(UP TO SERIAL No.7901) ...TRANSISTOR 2SC2712
Q20	8-729-271-23	(UP TO SERIAL No.7901) ...TRANSISTOR 2SC2712
Q21	8-729-159-64	TRANSISTOR 2SD596
Q22	8-729-100-66	TRANSISTOR 2SC1623
Q23	8-729-901-00	TRANSISTOR DTC124EK
Q24	8-729-100-66	TRANSISTOR 2SC1623
Q25	8-729-162-45	TRANSISTOR 2SB624-BV5
Q26	8-729-162-45	TRANSISTOR 2SB624-BV5
Q27	8-729-109-42	TRANSISTOR 2SK94-X2
Q28	8-729-100-66	TRANSISTOR 2SC1623
Q29	8-729-159-64	TRANSISTOR 2SD596
Q30	8-729-100-66	TRANSISTOR 2SC1623
Q201	8-729-901-00	TRANSISTOR DTC124EK
Q203	8-729-109-42	TRANSISTOR 2SK94-X2
Q204	8-729-100-66	TRANSISTOR 2SC1623

www.shortwaveradio.ch

ELECTRICAL PARTS

Ref.No.	Part No.	Description
R1	1-216-049-00	METAL CHIP 1K 5% 1/10W
R2	1-216-041-00	METAL CHIP 470 5% 1/10W
R3	1-216-121-00	METAL CHIP 1M 5% 1/10W
R4	1-216-025-00	METAL CHIP 100 5% 1/10W
R5	1-216-045-00	METAL CHIP 680 5% 1/10W
R6	1-216-025-00	METAL CHIP 100 5% 1/10W
R7	1-216-025-00	METAL CHIP 100 5% 1/10W
R8	1-216-025-00	METAL CHIP 100 5% 1/10W
R9	1-216-061-00	METAL CHIP 3.3K 5% 1/10W
R10	1-216-097-00	METAL CHIP 100K 5% 1/10W
R11	1-216-059-00	(FOR Q2:2SK508-K51) ...METAL CHIP 2.7K 5% 1/10W
R11	1-216-065-00	(FOR Q2:2SK508-K52) ...METAL CHIP 4.7K 5% 1/10W
R12	1-216-079-00	METAL CHIP 18K 5% 1/10W
R13	1-216-025-00	METAL CHIP 100 5% 1/10W
R14	1-216-053-00	METAL CHIP 1.5K 5% 1/10W
R15	1-216-057-00	METAL CHIP 2.2K 5% 1/10W
R16	1-216-025-00	METAL CHIP 100 5% 1/10W
R17	1-216-057-00	METAL CHIP 2.2K 5% 1/10W
R18	1-216-049-00	METAL CHIP 1K 5% 1/10W
R19	1-216-085-00	METAL CHIP 33K 5% 1/10W
R20	1-216-053-00	METAL CHIP 1.5K 5% 1/10W
R21	1-216-049-00	METAL CHIP 1K 5% 1/10W
R22	1-216-025-00	METAL CHIP 100 5% 1/10W
R23	1-216-115-00	METAL CHIP 560K 5% 1/10W
R24	1-216-081-00	METAL CHIP 22K 5% 1/10W
R25	1-216-049-00	METAL CHIP 1K 5% 1/10W
R26	1-216-097-00	METAL CHIP 100K 5% 1/10W
R27	1-216-043-00	METAL CHIP 560 5% 1/10W
R28	1-216-023-00	METAL CHIP 82 5% 1/10W
R29	1-216-081-00	METAL CHIP 22K 5% 1/10W
R30	1-216-083-00	METAL CHIP 27K 5% 1/10W
R31	1-216-053-00	METAL CHIP 1.5K 5% 1/10W
R32	1-216-033-00	METAL CHIP 220 5% 1/10W
R33	1-216-097-00	METAL CHIP 100K 5% 1/10W
R34	1-216-049-00	METAL CHIP 1K 5% 1/10W
R35	1-216-025-00	METAL CHIP 100 5% 1/10W
R36	1-216-049-00	METAL CHIP 1K 5% 1/10W
R37	1-216-001-00	(FOR Q16 OF 2SK238-K15) ...METAL CHIP 10 5% 1/10W
R37	1-216-025-00	(FOR Q16 OF 2SK238-K16) ...METAL CHIP 100 5% 1/10W
R38	1-216-097-00	METAL CHIP 100K 5% 1/10W
R39	1-216-025-00	METAL CHIP 100 5% 1/10W
R40	1-216-097-00	METAL CHIP 100K 5% 1/10W
R41	1-216-097-00	METAL CHIP 100K 5% 1/10W
R42	1-216-091-00	METAL CHIP 56K 5% 1/10W
R43	1-216-043-00	METAL CHIP 560 5% 1/10W
R44	1-216-222-00	METAL CHIP 10K 5% 1/8W
R45	1-216-057-00	METAL CHIP 2.2K 5% 1/10W
R46	1-216-033-00	METAL CHIP 220 5% 1/10W
R47	1-216-091-00	METAL CHIP 56K 5% 1/10W
R48	1-216-029-00	METAL CHIP 150 5% 1/10W
R50	1-216-748-11	METAL CHIP 39K 5% 1/10W
R51	1-216-049-00	METAL CHIP 1K 5% 1/10W
R52	1-216-105-00	(UP TO SERIAL No.7901) ...METAL CHIP 220K 5% 1/10W

ELECTRICAL PARTS

Ref.No.	Part No.	Description
R53	1-216-063-00	(UP TO SERIAL No.7901) ...METAL CHIP 3.9K 5% 1/10W
R54	1-216-049-00	(UP TO SERIAL No.7901) ...METAL CHIP 1K 5% 1/10W
R55	1-216-037-00	(UP TO SERIAL No.7901) ...METAL CHIP 330 5% 1/10W
R56	1-216-049-00	(UP TO SERIAL No.7901) ...METAL CHIP 1K 5% 1/10W
R57	1-216-059-00	METAL CHIP 2.7K 5% 1/10W
R58	1-216-055-00	METAL CHIP 1.8K 5% 1/10W
R59	1-216-073-00	METAL CHIP 10K 5% 1/10W
R60	1-216-067-00	METAL CHIP 5.6K 5% 1/10W
R61	1-216-073-00	METAL CHIP 10K 5% 1/10W
R62	1-216-059-00	METAL CHIP 2.7K 5% 1/10W
R63	1-216-069-00	METAL CHIP 6.8K 5% 1/10W
R64	1-216-097-00	METAL CHIP 100K 5% 1/10W
R65	1-216-057-00	METAL CHIP 2.2K 5% 1/10W
R66	1-216-049-00	METAL CHIP 1K 5% 1/10W
R67	1-216-067-00	METAL CHIP 5.6K 5% 1/10W
R68	1-216-059-00	METAL CHIP 2.7K 5% 1/10W
R69	1-216-097-00	METAL CHIP 100K 5% 1/10W
R70	1-216-017-00	METAL CHIP 47 5% 1/10W
R71	1-216-049-00	METAL CHIP 1K 5% 1/10W
R72	1-216-091-00	METAL CHIP 56K 5% 1/10W
R73	1-216-095-00	METAL CHIP 82K 5% 1/10W
R74	1-216-089-00	METAL CHIP 47K 5% 1/10W
R75	1-216-049-00	METAL CHIP 1K 5% 1/10W
R76	1-216-025-00	METAL CHIP 100 5% 1/10W
R77	1-216-025-00	METAL CHIP 100 5% 1/10W
R78	1-216-025-00	METAL CHIP 100 5% 1/10W
R79	1-216-296-00	METAL CHIP 0 5% 1/8W
R81	1-216-296-00	METAL CHIP 0 5% 1/8W
R82	1-216-295-00	METAL CHIP 0 5% 1/10W
R83	1-216-059-00	METAL CHIP 2.7K 5% 1/10W
R84	1-216-045-00	METAL CHIP 680 5% 1/10W
R85	1-216-061-00	METAL CHIP 3.3K 5% 1/10W
R86	1-216-033-00	METAL CHIP 220 5% 1/10W
R87	1-216-033-00	METAL CHIP 220 5% 1/10W
R88	1-216-295-00	METAL CHIP 0 5% 1/10W
R89	1-216-093-00	METAL CHIP 68K 5% 1/10W
R90	1-216-025-00	METAL CHIP 100 5% 1/10W
R91	1-216-049-00	METAL CHIP 1K 5% 1/10W
R92	1-216-045-00	(UP TO SERIAL No.7901) ...METAL CHIP 680 5% 1/10W
R93	1-216-043-00	METAL CHIP 560 5% 1/10W
R94	1-216-045-00	METAL CHIP 680 5% 1/10W
R95	1-216-053-00	METAL CHIP 1.5K 5% 1/10W
R96	1-249-411-11	CARBON 330 5% 1/6W
R98	1-216-065-00	(SERIAL No.7902 AND LATER) ....METAL CHIP 4.7K 5% 1/10W
R99	1-216-061-00	(SERIAL No.7902 AND LATER) ....METAL CHIP 3.3K 5% 1/10W
R100	1-216-049-00	(SERIAL No.7902 AND LATER) ....METAL CHIP 1K 5% 1/10W
R101	1-216-073-00	(SERIAL No.7902 AND LATER) ....METAL CHIP 10K 5% 1/10W
R102	1-216-101-00	(SERIAL No.7902 AND LATER) ....METAL CHIP 150K 5% 1/10W

www.shortwaveradio.ch

ELECTRICAL PARTS

Ref.No.	Part No.	Description
R103	1-216-049-00	(SERIAL No.7902 AND LATER) ....METAL CHIP 10K 5% 1/10W
R104	1-216-101-00	(SERIAL No.7902 AND LATER) ....METAL CHIP 150K 5% 1/10W
R105	1-216-053-00	(SERIAL No.7902 AND LATER) ....METAL CHIP 1.5K 5% 1/10W
R106	1-216-033-00	(SERIAL No.7902 AND LATER) ....METAL CHIP 220 5% 1/10W
R107	1-216-025-00	(SERIAL No.7902 AND LATER) ....METAL CHIP 100 5% 1/10W
R110	1-216-097-00	(UP TO SERIAL No.7901) ....METAL CHIP 100K 5% 1/10W
R204	1-216-019-00	METAL CHIP 56 5% 1/10W
R205	1-216-105-00	METAL CHIP 220K 5% 1/10W
R206	1-216-121-00	METAL CHIP 1M 5% 1/10W
R207	1-216-121-00	METAL CHIP 1M 5% 1/10W
R208	1-216-073-00	METAL CHIP 10K 5% 1/10W
R209	1-216-073-00	METAL CHIP 10K 5% 1/10W
R211	1-216-073-00	METAL CHIP 10K 5% 1/10W
R212	1-216-073-00	METAL CHIP 10K 5% 1/10W
R213	1-216-073-00	METAL CHIP 10K 5% 1/10W
R214	1-216-025-00	METAL CHIP 100 5% 1/10W
R215	1-216-073-00	METAL CHIP 10K 5% 1/10W
R216	1-216-069-00	METAL CHIP 6.8K 5% 1/10W
R217	1-216-049-00	METAL CHIP 1K 5% 1/10W
R218	1-216-067-00	METAL CHIP 5.6K 5% 1/10W
R219	1-216-121-00	METAL CHIP 1M 5% 1/10W
R220	1-216-121-00	METAL CHIP 1M 5% 1/10W
R222	1-216-109-00	METAL CHIP 330K 5% 1/10W
R223	1-216-073-00	METAL CHIP 10K 5% 1/10W
R225	1-216-037-00	METAL CHIP 330 5% 1/10W
R226	1-216-073-00	METAL CHIP 10K 5% 1/10W
R227	1-216-025-00	METAL CHIP 100 5% 1/10W
R228	1-216-049-00	METAL CHIP 1K 5% 1/10W
R229	1-216-073-00	METAL CHIP 10K 5% 1/10W
R230	1-216-073-00	METAL CHIP 10K 5% 1/10W
R231	1-216-073-00	METAL CHIP 10K 5% 1/10W
R232	1-216-061-00	METAL CHIP 3.3K 5% 1/10W
R233	1-216-073-00	METAL CHIP 10K 5% 1/10W
R234	1-216-073-00	METAL CHIP 10K 5% 1/10W
R235	1-216-073-00	METAL CHIP 10K 5% 1/10W
R236	1-216-073-00	(UP TO SERIAL No.7901) ...METAL CHIP 10K 5% 1/10W
R236	1-216-067-00	(SERIAL No.7902 AND LATER) ....METAL CHIP 5.6K 5% 1/10W
R237	1-216-073-00	(UP TO SERIAL No.7901) ....METAL CHIP 10K 5% 1/10W
R237	1-216-067-00	(SERIAL No.7902 AND LATER) ....METAL CHIP. 5.6K 5% 1/10W
R238	1-216-073-00	(UP TO SERIAL No.7901) ....METAL CHIP 10K 5% 1/10W
R238	1-216-067-00	(SERIAL No.7902 AND LATER) ....METAL CHIP 5.6K 5% 1/10W
R239	1-216-073-00	(UP TO SERIAL No.7901) ....METAL CHIP 10K 5% 1/10W
R239	1-216-067-00	(SERIAL No.7902 AND LATER) ....METAL CHIP 5.6K 5% 1/10W

ELECTRICAL PARTS

Ref.No.	Part No.	Description
R240	1-216-073-00	METAL CHIP 10K 5% 1/10W
R241	1-216-073-00	METAL CHIP 10K 5% 1/10W
R242	1-216-295-00	(UP TO SERIAL No.7901) ...METAL CHIP 0 5% 1/10W
R243	1-216-073-00	METAL CHIP 10K 5% 1/10W
R244	1-216-073-00	METAL CHIP 10K 5% 1/10W
R245	1-216-073-00	METAL CHIP 10K 5% 1/10W
R246	1-216-073-00	METAL CHIP 10K 5% 1/10W
R247	1-216-073-00	METAL CHIP 10K 5% 1/10W
R248	1-216-037-00	(SERIAL No.7902 AND LATER) ....METAL CHIP 330 5% 1/10W
RV1	1-237-680-11	RES, VAR, SLIDE 50K (VOLUME)
RV2	1-237-402-21	(SERIAL No.7902 AND LATER) ...RES, ADJ 1K (AGC)
S1	1-570-331-11	SWITCH, SLIDE (TONE)
S218	1-553-510-00	SWITCH, SLIDE (MW CH STER)
S219	1-553-510-00	SWITCH, SLIDE (MAIN POWER)
S220	1-553-510-00	SWITCH, SLIDE (ALARM)
SP1	1-502-631-00	SPEAKER
T1	1-404-734-11	TRANSFORMER, IF
T2	1-404-362-41	TRANSFORMER, IF
T3	1-448-915-11	TRANSFORMER, DC-DC CONVERTER
TH1	1-800-200-00	(UP TO SERIAL No.7901)..THERMISTOR S-3K
X1	1-567-840-11	VIBRATOR, CRYSTAL
X201	1-567-769-21	VIBRATOR, CRYSTAL
XF1	1-567-823-11	FILTER, CRYSTAL

ACCESSORY & PACKING MATERIAL

Part No.	Description
1-463-659-11	(E)....ADAPTOR, AC:AC-240
1-506-409-00	(E2)...ADAPTOR, CONVERSION
1-504-059-11	MAGNETIC EARPHONE(ME-20H)
3-701-616-00	BAG, POLYETHYLENE
3-701-619-00	BAG, POLYETHYLENE, STANDARD
3-701-623-00	BAG, POLYETHYLENE
*3-701-999-00	(US,Canadian,E).....LABEL, SERIAL NUMBER
*3-703-264-10	(AEP,UK,FRANCE,AUS)...LABEL, SERIAL NUMBER (B)
3-898-304-01	(E).....CARTON, INDIVIDUAL
3-898-365-01	(AEP,UK,FRANCE,AUS)...CARTON, INDIVIDUAL
3-893-940-11	GUIDE, SHORT WAVE
3-898-306-01	CUSHION
3-898-360-01	CASE, CARRYING
3-898-361-01	SHEET, PROTECTION
3-990-102-11	(AEP,UK,FRANCE,AUS,E) .....MANUAL, INSTRUCTION
3-990-102-21	(US,Canadian,E) .....MANUAL, INSTRUCTION
3-990-102-41	(AEP).....MANUAL, INSTRUCTION
3-990-102-52	(E,Saudi Arabia,MIDDLE EAST) .....MANUAL, INSTRUCTION
3-990-102-31	(Canadian) .....MANUAL, INSTRUCTION
3-898-305-01	(US,Canadian,E)..CARTON, INDIVIDUAL
3-898-386-01	(E) .....CUSHION, AC ADAPTOR
A-3604-136-A	ANTENNA ASSY, COMPACT

www.shortwaveradio.ch

TROUBLESHOOTING GUIDE

Should any problem occur with the unit, make the following simple checks to determine whether or not servicing is required. If the problem persists after you have made these checks, consult the nearest Sony dealer for further information.

The power is not turned on even if you press the ON/OFF button.
- Weak batteries.
- Incorrect polarity of batteries.
- The MAIN POWER switch is set to OFF.
- The KEY PROTECT is set.
- The AC power adaptor, the battery case or the car battery cord is disconnected.
- Battery operation is attempted while the AC power adaptor, the battery case or the car battery cord is connected to the unit, but not to a wall outlet or cigarette lighter socket.

Each function does not work even if operating the unit.
- The KEY PROTECT is set.

Display is dim.
- Weak batteries.
- The unit is being used in extremely high temperatures or in a place with excessive moisture.

Sound is not heard at all.
- The VOLUME control is turned down completely.
- The earphone is plugged in.

Very weak or interrupted sound, or unsatisfactory reception.
- Weak batteries.
- Tuning or antenna adjustment is not correct.
- Weak signal. ➡ When in a vehicle or in a building, listen near a window.
- Figures on the frequency display differ a little from the acted station frequency. ➡ Tune more precisely. (See page 12.)

The preset station cannot be received when preset tuning.
- Incorrect preset station button is pressed.
- The preset station is erased. ➡ Preset the station again.

The radio does not turned on at the alarm-setting time.
- The STANDBY button has not been pressed.
- The alarm-setting time is erased. ➡ Set the alarm again.
- The MAIN POWER switch is set to OFF.

Sony Corporation
Audio Group

9-952-684-11

English
87H0298-1
Printed in Japan
© 1987. 8

www.shortwaveradio.ch

ICF-7600DA/7700

SONY

SERVICE MANUAL

AEP Model
UK Model
E Model
AUS Model
ICF-7600DA
US Model
Canadian Model
ICF-7700

SUPPLEMENT-1

File this supplement-1 with the service manual.

Subject:
- **Main board change**
- **Italian model addition**
- **Revise of EXPLODED VIEWS**

- Distinction between AEP model and Italian model a part of indication of display window differs between AEP and Italian model.
  AEP model : SW1 to 12
  Italian model: SW1 to 11

– Italian model –

Display window

The indications appear as follows.

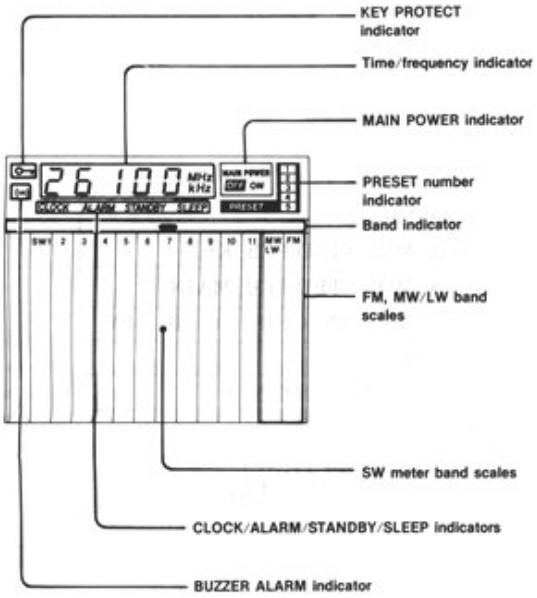

– AEP model –

Display window

The indications appear as follows.

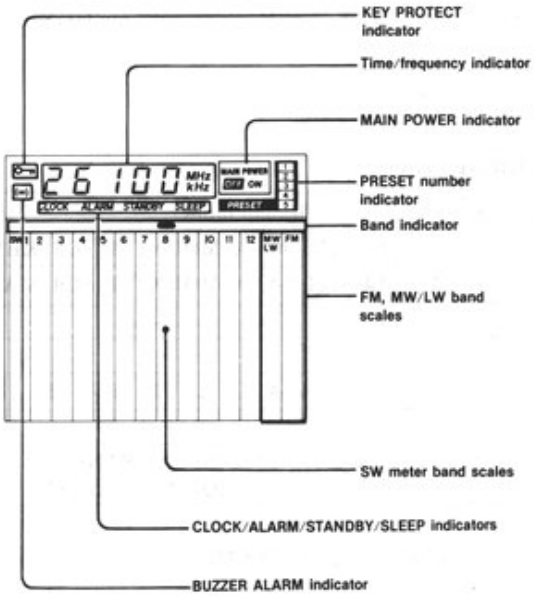

www.shortwaveradio.ch

1. **Main board has been changed.**

Applicable Serial No.: 62627 and later.

Because of this, schematic diagram has partly changed.

NOTE:
CAPACITORS:
MF: μF, PF: μμF.

- **Following parts differ with former type and new type.**

Ref. No.	Former from Serial No. 7902 to 62626	New Serial No. 62627 and later	Remarks
C20	ELECT 33MF 6.3V	1-126-205-11 ELECT 47MF 6.3V	changed
C44	CERAMIC 0.022MF 25V	1-161-051-00 CERAMIC 0.01MF 25V	changed
C48	CERAMIC 0.022MF 25V	1-161-051-00 CERAMIC 0.01MF 25V	changed
C83	ELECT 4.7MF 25V	1-126-198-11 ELECT 4.7MF 35V	changed
C84	ELECT 0.47MF 50V	1-135-083-00 TANTALUM CHIP 0.47MF 25V	changed
C106	TANTALUM CHIP 1MF 25V	1-162-638-11 CERAMIC CHIP 1MF 16V	changed
C211	CERAMIC CHIP 36PF 50V	1-163-102-00 CERAMIC CHIP 24PF 50V	changed
R81	METAL CHIP 0Ω 1/8W	————	deleted
R88	METAL CHIP 0Ω 1/10W	————	deleted
R99	METAL CHIP 3.3kΩ 1/10W	1-216-060-00 METAL GLAZE CHIP 3kΩ 1/10W	changed

2. **Italian model addition**

The set of Italian model is almost the same as the one of AEP model (Serial No. 62627 and later).

Therefore, refer to ICF-7600DA/7700 Service Manual previously issued and this supplement for the information of Italian model.

Following portions differ from those in AEP model (Serial No. 62627 and later).

ELECTRICAL PARTS

S/M page	Ref. No.	Italian model	AEP model
51	902	*A-3675-008-A MOUNTED PCB, KEY	A-3675-006-A MOUNTED PCB, KEY
	904	*A-3660-743-A MOUNTED PCB, MAIN	A-3660-685-A MOUNTED PCB, MAIN
	C2	————	1-163-021-00 CERAMIC CHIP 0.01MF 50V
52	D4	————	8-719-123-79 ISS279
53	IC201	8-759-141-41 IC μPD1715G-543	8-759-112-16 IC μPD1715G-529
	L2	————	1-402-274-11 COIL (ANT)
	LCD1	1-808-095-11 DISPLAY PANEL, LIQUID CRYSTAL	1-807-778-11 DISPLAY PANEL, LIQUID CRYSTAL

ACCESSORY & PACKING MATERIAL

S/M page	Italian model	AEP model	Description
55	3-898-393-01	3-898-365-01	CARTON, INDIVIDUAL
	————	3-990-102-11	MANUAL, INSTRUCTION
	3-990-102-61	3-990-102-41	MANUAL, INSTRUCTION

www.shortwaveradio.ch

- **Service manual page 1.**

SPECIFICATIONS

Frequency rang FM: US, Canadian model: 76.0–108.0 MHz
AEP, Italian, UK, E, AUS model: 87.5–108.0 MHz
MW: Except for Italian model: 530–1,700 kHz
Italian model : 531–1,602 kHz
LW: Except for Italian model: 150–285 kHz
Italian model : 147–285 kHz
SW: Except for Italian model: 90–11 meter SW broadcast bands
Italian model : 75–11 meter SW broadcast bands

- **Service manual page 5.**

1-2. OUTLINE OF THE C-MOS DIGITAL-TUNING SYSTEM IC201, μPD1715G-529 ((μPD1715G-543)).

1-2-1. OUTLINE OF THE STATION-SELECTION

1) Receiving-frequency Coverages:

The following table shows the frequency coverages the μPD1715G-529 ((μPD1715G-543)) can receive.

BAND	METER BAND	FREQUENCY COVERAGE	CHANNEL SEPARATION	NUMBER OF CHANNEL	NOMINAL SPACING	INTERMEDIATE FREQUENCY
LW		150kHz ~ 285kHz ((147kHz~285kHz))	3kHz	46ch ((47ch))	3kHz	10.71MHz
MW1		531kHz ~ 1,602kHz	3kHz	359ch	3kHz	10.71MHz
MW2		530kHz ~ 1,700kHz	5kHz	235ch	5kHz	10.71MHz
SW	90m *1	3,050kHz ~ 3,565kHz	5kHz	104ch	5kHz	10.71MHz
	75m	3,700kHz ~ 4,215kHz ((3,850kHz~4,365kHz))	5kHz	104ch	5kHz	10.71MHz
	60m	4,650kHz ~ 5,165kHz	5kHz	104ch	5kHz	10.71MHz
	49m	5,800kHz ~ 6,315kHz	5kHz	104ch	5kHz	10.71MHz
	41m	6,950kHz ~ 7,465kHz	5kHz	104ch	5kHz	10.71MHz
	31m	9,375kHz ~10,010kHz	5kHz	128ch	5kHz	10.71MHz
	25m	11,525kHz ~12,160kHz	5kHz	128ch	5kHz	10.71MHz
	21m	13,375kHz ~14,010kHz	5kHz	128ch	5kHz	10.71MHz
	19m	14,975kHz ~15,610kHz	5kHz	128ch	5kHz	10.71MHz
	16m	17,475kHz ~18,110kHz	5kHz	128ch	5kHz	10.71MHz
	13m	21,325kHz ~21,960kHz	5kHz	128ch	5kHz	10.71MHz
	11m	25,475kHz ~26,100kHz	5kHz	126ch	5kHz	10.71MHz
FM1		87.50MHz ~108.00MHz	50kHz	411ch	50kHz	10.7MHz
FM2		76.00MHz ~108.00MHz	50kHz	641ch	50kHz	10.7MHz

NOTE: LW and MW1 (or MW2) bands are taken into a single band in the μPD1715G-529 ((μPD1715G-543)).

(( )): Italian model
*1 : Italian model has no 90m band.

www.shortwaveradio.ch

- **Service manual page 9.**

PIN Nr.	SYMBOL	NAMING	DESCRIPTION
(cont'd)			

BAND (METERBAND)	BAND-OUTPUT CODE (BINARY) MSB←→LSB				SWH	SWL
LW/MW1/MW2	0	0	1	0	Low	High
SW (90m)*1	0	0	1	1	Low	High
SW (75m)	0	1	0	0	Low	High
SW (60m)	0	1	0	1	Low	High
SW (49m)	0	1	1	0	Low	High
SW (41m)	0	1	1	1	Low	High
SW (31m)	1	0	0	0	High	Low
SW (25m)	1	0	0	1	High	Low
SW (21m)	1	0	1	0	High	Low
SW (19m)	1	0	1	1	High	Low
SW (16m)	1	1	0	0	High	Low
SW (13m)	1	1	0	1	High	Low
SW (11m)	1	1	1	0	Low	High
FM1/FM2	1	1	1	1	Low	Low

NOTE: Also refer to 1-2-4. Description On Displaying Function on later pages.

*1: Italian model has no 90m band.

- **Service manual page 11.**

UP (⇨) DOWN (⇦)	Shortwave Meterband Change	The shortwave receiving spectrum is divided into 12 (twelve) *1 broadcast bands. Each band up to 41-meter band is further divided into 104 channels, and each band up to 13-meter band is further divided into 128 channels. The 11-meter band is divided into 126 channel. a) When the "UP" key is pressed while receiving a shortwave band, the receiving band changes to the next higher band successively. When the SW12 (11-meter) *2 band is reached, however, the band changes to the lowest band, i.e., SW1 (90-meter) *3 band. The band indicator on the LCD moves appropriately each time the band is changed. b) When the "DOWN" key is pressed while receiving a shortwave band, the receiving band changes to the next adjacent lower band successively. When the SW1 (90-meter) *3 band is reached, however, the band changes to the highest band, i.e., SW12 (11-meter) *2 band. The band indicator on the LCD moves appropriately each time the band is changed. c) When the "UP" or "DOWN" key is kept depressed approximately for more than 500 msec, the band changes up or down to the adjacent band at an interval of approximately 250 msec until the lowest or the highest band is reached at which the band changing ceases. d) When the SW band is changed up and down, the receiver receives the same channel number allocated for this receiver as the last channel of the last band. When the band is changed from SW6 (31-meter) *4 to SW5 (41-meter) *5 and the receiving channel has been higher than the channel 104, however, the receiver receives the channel 104, i.e., the highest channel of these lower shortwave band group of this receiver. When the band is changed from SW12 (11-meter) *2 to SW1 (90-meter) *3 band and the receiving channel has been higher than the channel 102, the receiver receives the channel 102.

*1–5 are as follows in Italian model.

*1: 11 (eleven)
*2: SW11 (11-meter)
*3: SW1 (75-meter)
*4: SW5 (31-meter)
*5: SW4 (41-meter)

www.shortwaveradio.ch

- **Service manual page 18.**

1-4. ON THE NEW LCD PANEL, LCD1

This radio uses a new liquid-crystal display panel incorporating dial pointer itself, band indicator, ordinal frequency and clock indicators, etc. The outline of this LCD is as follows.

1) Outline of Pinouts:

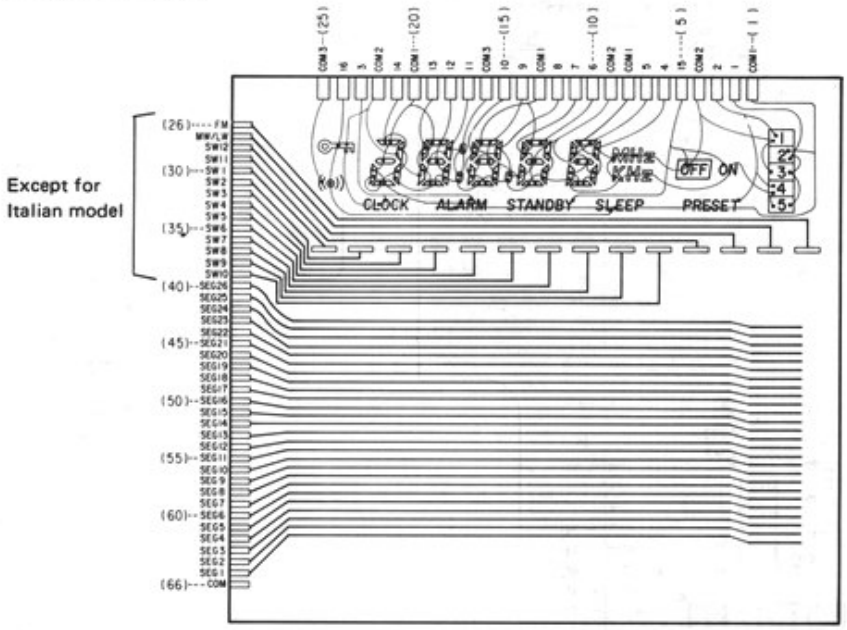

Italian model

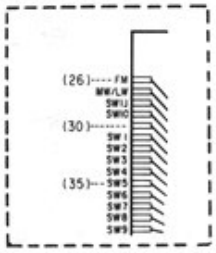

( ): TERMINAL NR. OF LCD

www.shortwaveradio.ch

- **Service manual page 19.**

CLOCK-FREQUENCY ADJUSTMENT

Procedure:

1. Adjust CT201 so that the reading on the frequency counter becomes in 10.860000 MHz (10.710 MHz + 0.150 MHz).
2. Hit the FM button. The band should become in FM and the frequency on the LCD panel of the set should be 76.00 MHz (US, Canadian model) or 87.5 MHz (AEP, Italian, UK, E, AUS model).
3. Hit the SW button. The band should become in the SW1 and the frequency on the LCD panel of the set should be 3,050 kHz (Except for Italian model) or 3,850 kHz (Italian model).

- **Service manual page 23.**

SW TRACKING ADJUSTMENT

Procedure and Adjustment Location:

1. Check and verify the VCO voltages on the LPF line at both the lowest and highest frequency points as shown. See page 20 for the LPF line.

LOW ENDS	HIGH ENDS
VCO(L) : 150kHz VCO(H) : 9,375kHz	VCO(L) : 7,465kHz VCO(H) : **21,960 kHz**
1.50~2.00V	12.5~15.5V

VCO(L) : MW/LW~SW5, SW12 (Except for Italyan model)
MW/LW~SW4, SW11 (Italian model)
VCO(H) : SW6~SW11 (Except for Italian model)
SW5~SW10 (Italian model)

Adjust for a maximum reading on the VTVM.		
SW1*	3,300kHz	L2
SW2((SW1))	3,950kHz ((4,100kHz))	L3
SW3((SW2))	4,900kHz	L4
SW4((SW3))	6,060kHz	L5
SW5((SW4))	7,200kHz	L6
SW6((SW5))	9,700kHz	L7
SW7((SW6))	11,850kHz	L8
SW8((SW7))	13,700kHz	L9
SW9((SW8))	15,300kHz	L10
SW10((SW9))	17,800kHz	L11
SW11((SW10))	21,600kHz	L12
SW12(SW11))	25,800kHz	L13

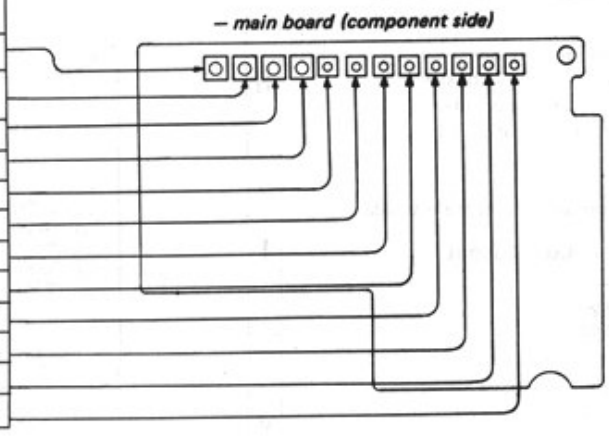

(( )): Italian model
* : Except for Italian model

www.shortwaveradio.ch

3. PRINTED WIRING BOARD (SERIAL No. 62,627 AND LATER)

●SEMICONDUCTOR LOCATION

Ref.No.	Location	Ref.No.	Location
D1	B-21	IC1	C-23
D2	C-22	IC2	C-28
D3	B-22	IC3	G-26
D4	B-18	IC4	E-14
D5	B-18	IC5	G-13
D6	B-17	IC6	H-14
D7	B-17	IC7	D-12
D8	B-16	IC201	E-7
D9	B-16	IC202	G-7
D10	B-15	IC203	G-3
D11	B-15	IC204	F-3
D12	B-14	IC205	F-3
D13	B-14	IC206	D-3
D14	B-13		
D15	B-13		
D16	C-21	Q1	C-20
D17	C-21	Q2	C-17
D18	C-18	Q3	C-15
D19	C-21	Q4	E-16
D20	C-21	Q5	C-19
D21	E-23	Q6	D-18
D22	E-22	Q7	F-18
D23	D-26	Q8	F-19
D24	E-26	Q9	E-19
D25	F-26	Q10	D-22
D26	F-26	Q11	D-22
D28	B-22	Q12	D-22
D29	D-28	Q13	D-27
D30	D-29	Q14	E-27
D31	G-12	Q15	D-13
D32	F-27	Q16	D-16
D33	G-12	Q17	E-24
D34	G-28	Q18	D-13
D35	H-19	Q21	F-13
D36	C-13	Q22	D-28
D37	C-24	Q23	D-29
D38	C-18	Q24	D-12
D40	D-40	Q25	G-14
D41	D-40	Q26	G-14
D42	E-26	Q27	H-15
D201	F-8	Q28	G-13
D202	I-5	Q29	G-28
D203	D-8	Q30	C-13
D204	E-5	Q201	D-5
D205	D-6	Q203	E-6
		Q204	F-5
D206	B-3		
D207	F-4		

Note:

- ○—— : parts extracted from the component side.
- ●—— : parts extracted from the conductor side.
- ■ : parts mounted on the conductor side.
- ⬚ : indicates side identified with part number.
- ⊗ : Through hole.
- ▒ : Pattern of the rear side.
- ☐ : Chip components extracted from the rear side.

●Semiconductors Lead Layout

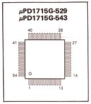

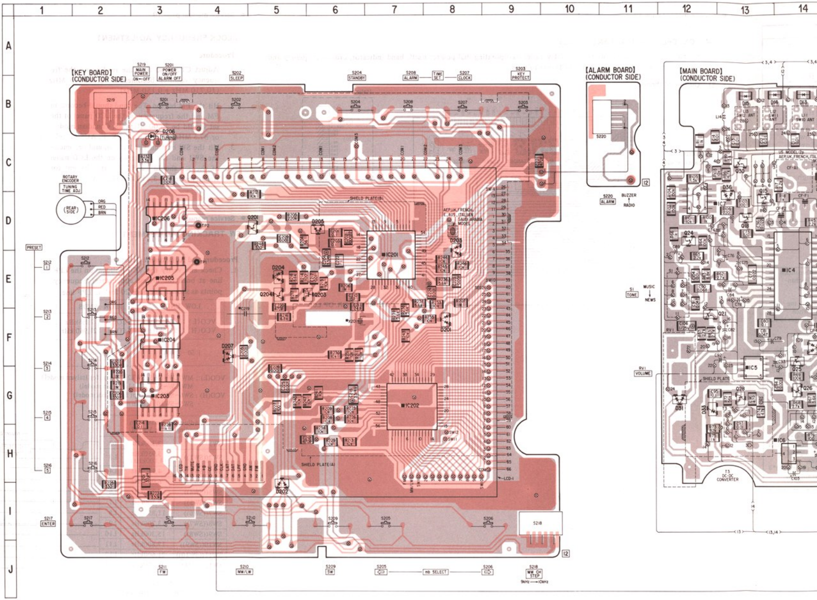

www.shortwaveradio.ch

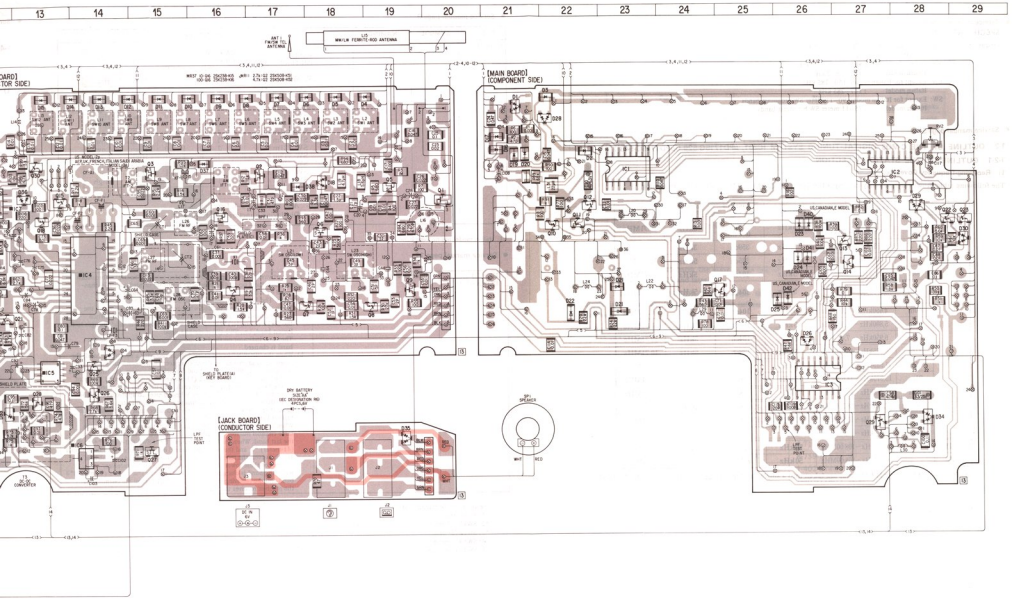
13
14
15
16
17
18
19
20
21
22
23
24
25
26
27
28
29
[MAIN BOARD]
(COMPONENT SIDE)
[JACK BOARD]
(CONDUCTOR SIDE)
SHIELD PLATE (at JACK BOARD)
DRY BATTERY
3.0V 1.5V
(DC DC CONVERTER NO CIRCUIT)
DC DC CONVERTER
SP SPEAKER
WHT
RED
MIC4
MIC5
IC1
IC2
IC3
IC4
IC5
IC6
IC7
IC8
IC9
IC10
IC11
IC12
IC13
IC14
IC15
IC16
IC17
IC18
IC19
IC20
IC21
IC22
IC23
IC24
IC25
IC26
IC27
IC28
IC29
IC30
IC31
IC32
IC33
IC34
IC35
IC36
IC37
IC38
IC39
IC40

4. SCHEMATIC DIAGRAM

The following portions have been changed from Serial No. 62,627 and later

: changed portion

– Main board –

Service manual pages 31, 32

2nd MIX AMP, SW RF AMP, VCO BUFFER, AM B+ Section

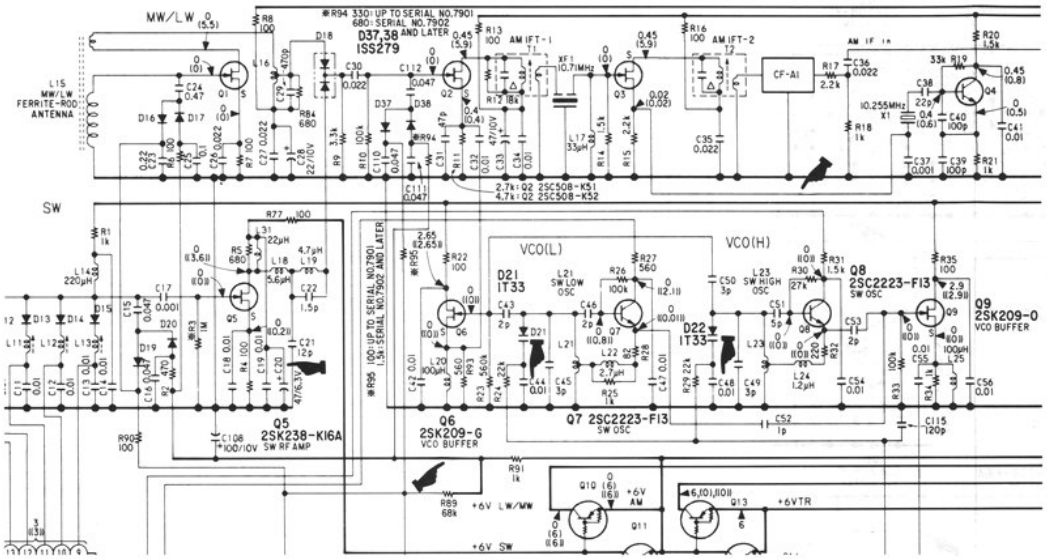

Service manual page 33

FM IF AMP, DET MIX AMP, AF AMP (IC4) Section

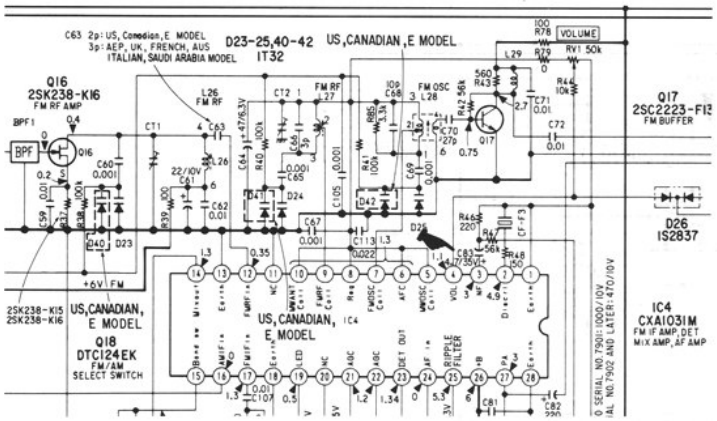

Service manual page 33

MUTING Section

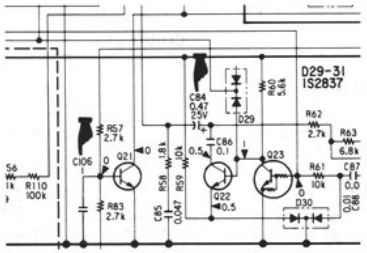

Service manual page 33

AGC AMP (IC7) Section

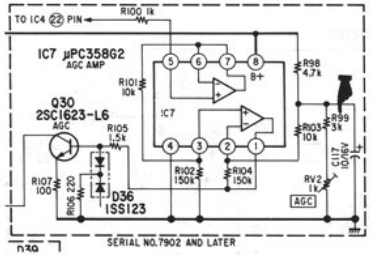

– Key board –

Service manual page 40

RX CONTROLLER / LCD DRIVER (IC201) Section

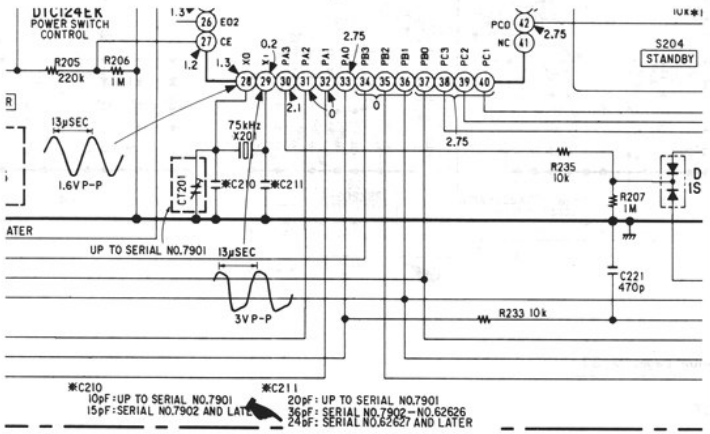

— Italian model —

The schematic diagram in Italian model is the same as those in AEP model except for the following portion.

: different portion

Service manual page 31

RF TUNING COIL Section

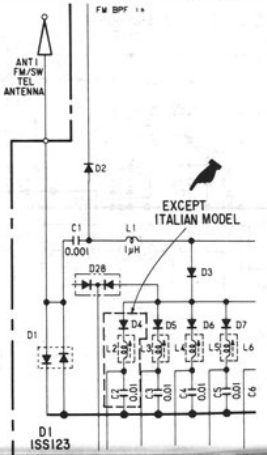

www.shortwaveradio.ch

CORRECTION

☛ : CORRECTED PORTION

Correct Schematic Diagram as show below.

– Main board –

Service manual page 31

INCORRECT

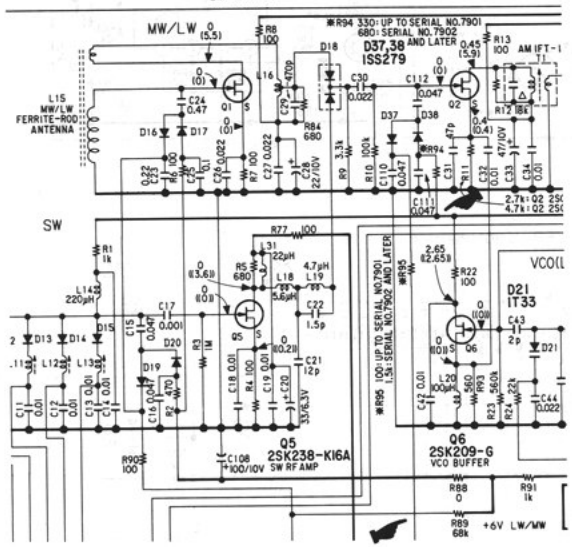

CORRECT

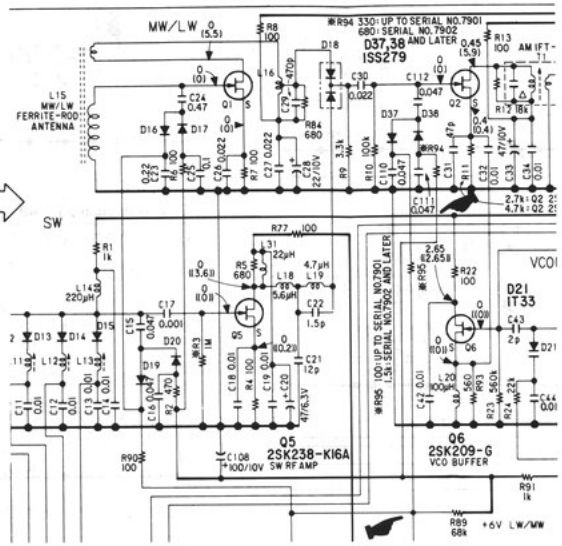

Service manual pages 32, 33

INCORRECT

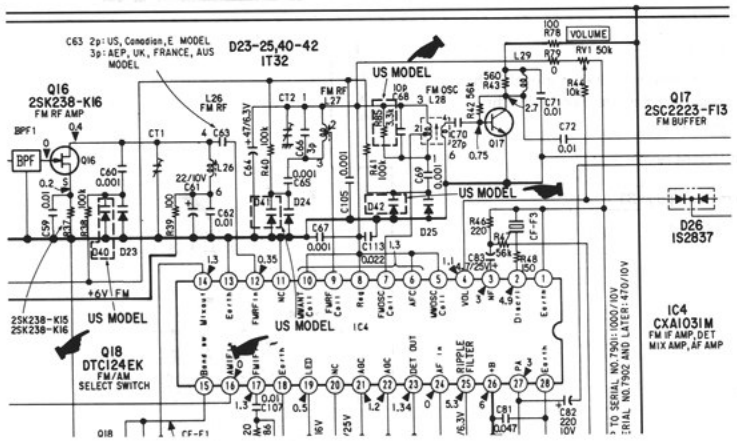

CORRECT

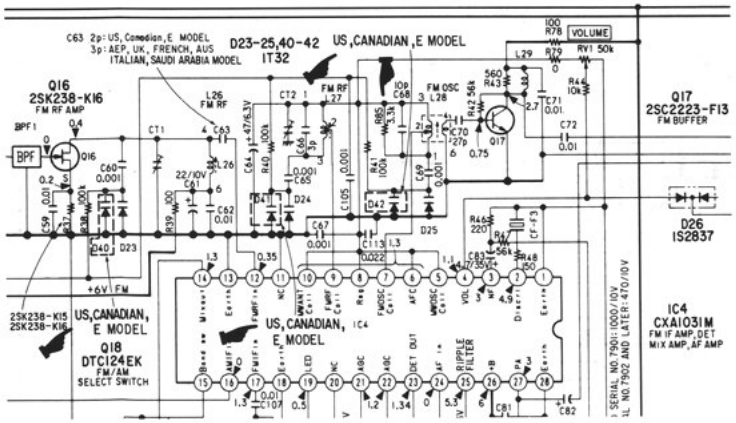

www.shortwaveradio.ch

– Key board –

Service manual page 39

INCORRECT

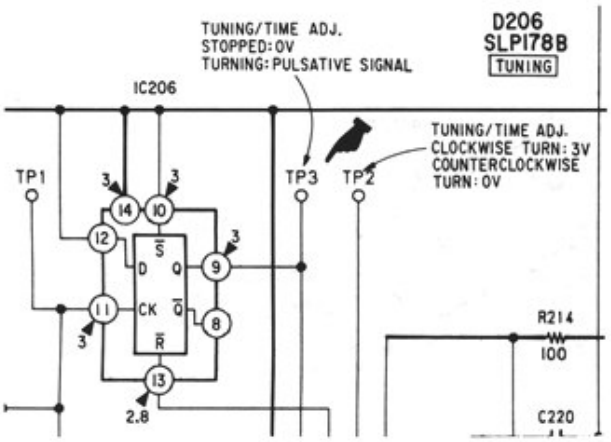

CORRECT

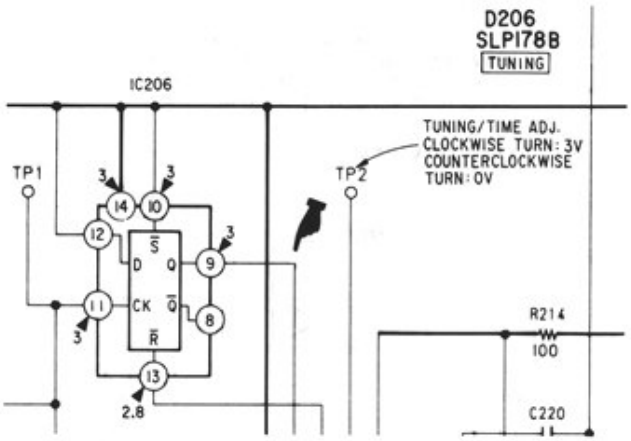

Service manual page 41

INCORRECT

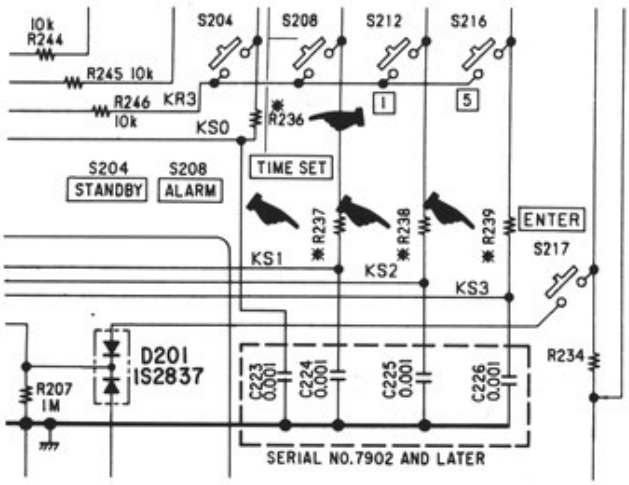

CORRECT

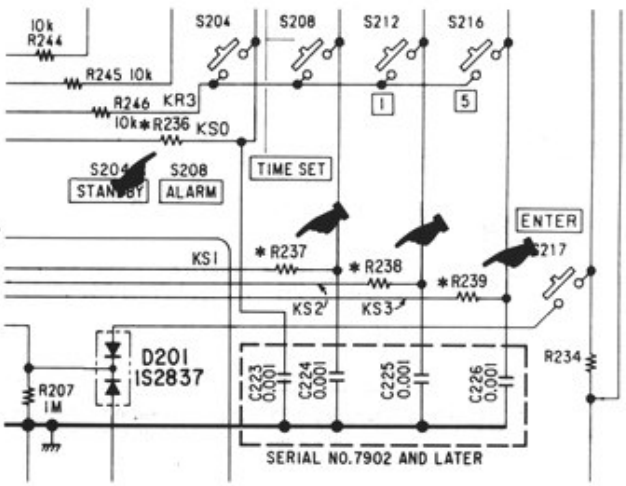

www.shortwaveradio.ch

5. EXPLODED VIEWS

NOTE:

- The mechanical parts with no reference number in the exploded views are not supplied.
- The construction parts of an assembled part are indicated with a collation number in the remark column.
- Items marked "★" are not stocked since they are seldom required for routine service. Some delay should be anticipated when ordering these items.
- Due to standardization, parts with part number suffix -XX and -X may be different from the parts specified in the components used on the set.

(1) REVISED

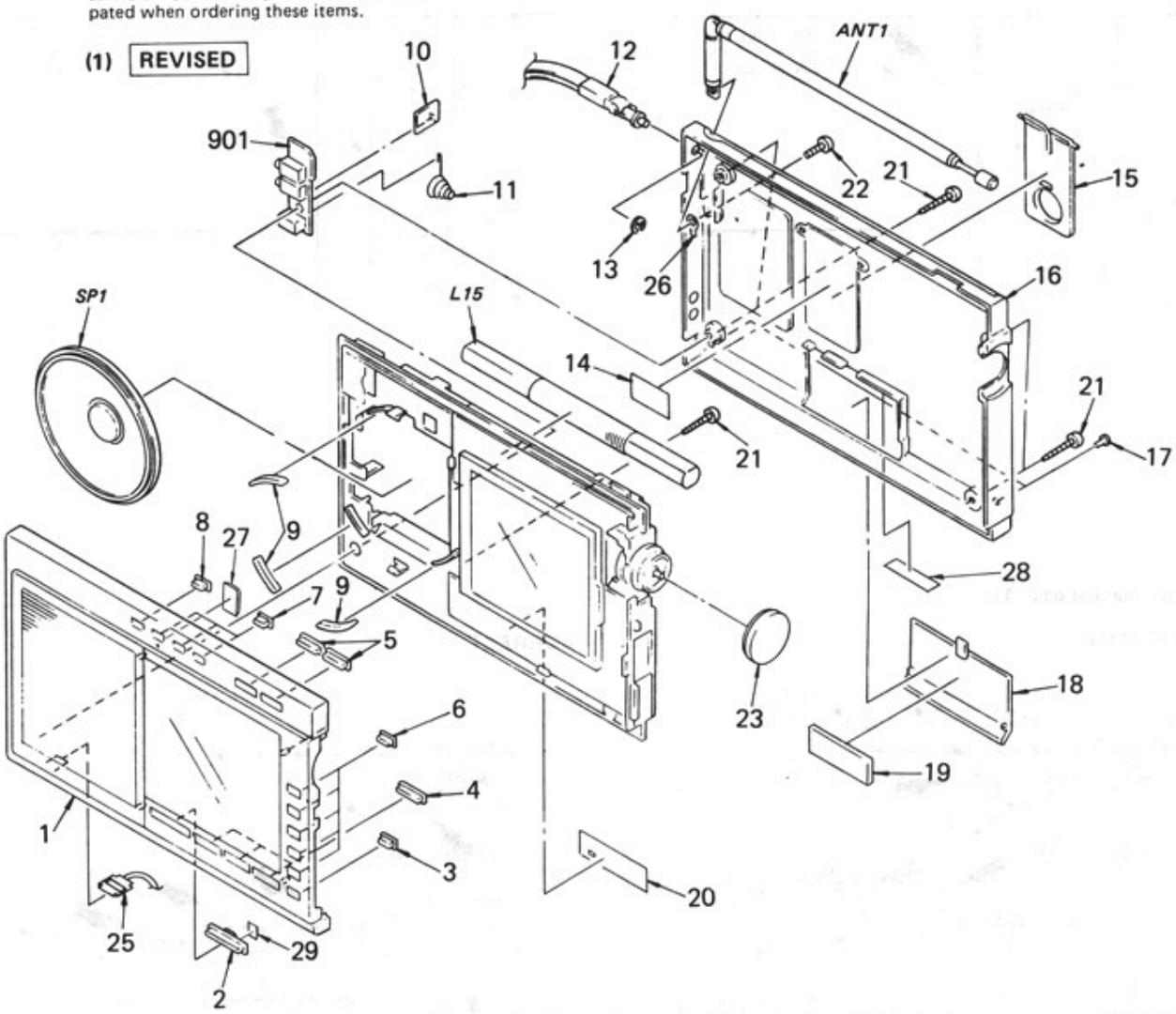

No.	Part No.	Description	Remarks
1	A-3640-970-A	(AEP,UK,FRENCH,E,AUS).CABINET (FRONT) ASSY	
	A-3640-971-A	(US,Canadian).....CABINET (FRONT) ASSY	
	A-3640-211-A	(Italian).....CABINET(FRONT)ASSY	
2	3-898-327-01	BUTTON, SELECT	
3	3-898-336-11	BUTTON, SET	
4	3-898-335-01	BUTTON, BAND	
5	3-898-338-01	BUTTON, POWER	
6	3-898-337-01	BUTTON, MEMORY	
7	3-898-336-01	BUTTON, SET	
8	3-898-336-21	BUTTON, SET	
9	3-881-931-00	CUSHION, SPEAKER	
10	3-898-322-01	TERMINAL, BATTERY	
11	3-889-819-00	SPRING	
12	3-891-813-11	STRAP, HAND	
13	7-624-104-04	STOP RING 2.0, TYPE -E	
14	*3-898-323-01	COVER, STAND	
15	3-898-324-01	STAND	
16	3-898-317-11	(US,Canadian).....LID, REAR, CABINET	
	3-898-317-21	(AEP,UK,FRENCH,AUS,E).LID, REAR, CABINET	
	3-898-817-31	(Italian)..... LID, REAR, CABINET	

No.	Part No.	Description	Remarks
17	3-880-917-00	STOPPER	
18	3-891-817-21	LID, BATTERY CASE	
19	3-485-341-11	CUSHION	
20	*3-898-301-01	LABEL, (MW CH) STEP	
21	7-685-151-19	SCREW +P 3X20 TYPE2 NON-SLIT	
22	7-682-146-09	SCREW +P 3X5	
23	X-3898-307-1	KNOB ASSY, TUNING	
25	3-898-358-01	TERMINAL, GROUND	
26	3-898-362-01	LUG, PLATE	
27	9-911-839-XX	SPACER(C)	
28	*3-703-264-11	(EXCEPT for US,Canadian) .....LABEL(B),SERIAL NUMBER	
	*3-701-999-00	(US,Canadian) .....LABEL,SERIAL NUMBER	
29	3-330-681-01	SHEET	
901	*1-622-119-11	PC BOARD, JACK	
ANT1	1-501-376-11	ANTENNA, TELESCOPIC	
L15	1-402-275-11	ANTENNA, FERRITE-ROD (LW/MW)	
SP1	1-502-631-00	SPEAKER	

www.shortwaveradio.ch

(2) REVISED

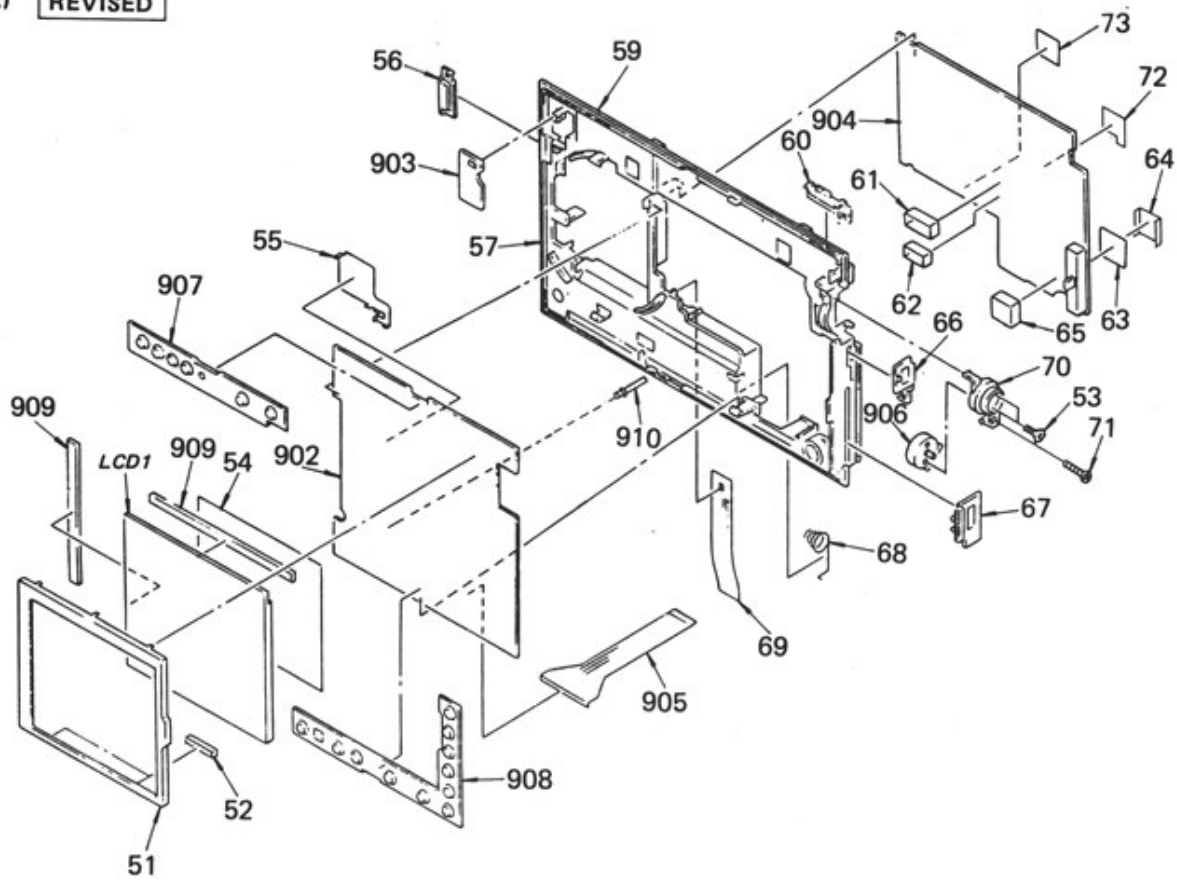

No.	Part No.	Description	Remarks
51	*3-898-333-01	HOLDER, LCD	
52	3-898-349-01	CUSHION (A)	
53	3-892-318-00	SCREW, SMALL	
54	3-898-350-01	CUSHION (B)	
55	*3-898-311-01	PLATE (B), SHIELD	
56	3-898-318-01	(EXCEPT for 2E3)...KNOB,SLIDE	
	3-898-318-21	(2E3).....KNOB,SLIDE	
59	*3-898-316-01	CHASSIS	
60	3-898-318-11	KNOB, SLIDE	
61	*3-898-342-01	CASE (FM RF), SHIELD	
62	*3-898-343-01	CASE (FM OSC), SHIELD	
63	*X-3898-305-1	PLATE ASSY, SHIELD, D/D P	
64	X-3898-304-1	PLATE (A) ASSY, SHIELD	
65	*3-898-345-01	CASE, SHIELD, D/D M	
66	3-898-319-01	KNOB, TONE	
67	3-898-320-01	KNOB, VOLUME	
68	3-883-423-00	SPRING	
69	*3-898-341-01	CLOTH, DRAWER, BATTERY	

No.	Part No.	Description	Remarks
70	*3-898-321-01	HOLDER	
71	7-685-534-19	SCREW +B 2.6X8	
72	X-3898-321-2	PLATE ASSY, SHIELD	
73	*X-3898-306-1	PLATE(C)ASSY,SHIELD	
902	A-3675-005-A	(US,Canadian,E).....MOUNTED PCB, KEY	
	A-3675-006-A	(AEP,UK,FRENCH,AUS)..MOUNTED PCB, KEY	
	*A-3675-008-A	(Italian).....MOUNTED PCB, KEY	
903	*1-622-121-11	PC BOARD, ALARM	
904	A-3660-679-A	(US,Canadian,E).....MOUNTED PCB, MAIN	
	A-3660-685-A	(AEP,UK,FRENCH,AUS)..MOUNTED PCB, MAIN	
	*A-3660-743-A	(Italian).....MOUNTED PCB,MAIN	
905	1-622-135-11	PC BOARD, FLEXIBLE	
906	1-464-788-11	ENCODER, ROTARY	
907	1-571-057-11	SWITCH, RUBBER KEY (S205,206,209-217)	
908	1-571-058-11	SWITCH, RUBBER KEY (S201-204,207,108)	
909	1-535-655-11	CONDUCTOR (CONNECTION)	
910	1-535-666-11	TERMINAL	
LCD1	1-807-777-11	(US,Canadian,E) ...DISPLAY PANEL, LIQUID CRYSTAL	
	1-807-778-11	(AEP,UK,FRANCE,AUS) ...DISPLAY PANEL, LIQUID CRYSTAL	
	1-808-095-11	(Italian) ...DISPLAY PANEL, LIQUID CRYSTAL	

www.shortwaveradio.ch

9-952-684-81

Sony Corporation
Audio Group

English
88A0298-1
Printed in Japan
©1988.1

www.shortwaveradio.ch